FUJITSU

SPLIT TYPE
ROOM AIR CONDITIONER
CASSETTE TYPE

SERVICE MANUAL

Refrigerant R410A

Indoor unit	Outdoor unit
AUTG24LVLC	AOTG24LATC

CONTENTS

SPECIFICATIONS 1
DIMENSIONS 2
REFRIGERANT SYSTEM DIAGRAM 4
CIRCUIT DIAGRAM 5
INDOOR PCB CIRCUIT DIAGRAM 6
OUTDOOR PCB CIRCUIT DIAGRAM . . 10
ERROR DETECTION 14
PARTS (DECORATION PANEL) 15
PARTS (INDOOR UNIT) 17
PARTS (OUTDOOR UNIT) 20
ACCESSORIES 24

FUJITSU GENERAL LIMITED

SPECIFICATIONS

ELECTRICAL DATA

TYPE		Cool and heat
INDOOR UNIT		AUTG24LVLC
OUTDOOR UNIT		AOTG24LATC
COOLING CAPACITY		7.10 kW
HEATING CAPACITY		8.00 kW
POWER SOURCE		240 V
FREQUENCY		50 Hz
RUNNING CURRENT	Cool	9.1 A
	Heat	9.3 A
INPUT WATTS	Cool	2.16 kW
	Heat	2.21 kW
E.E.R.	Cool	3.29 kW/kW
COP	Heat	3.61 kW/kW
MOISTURE REMOVAL		2.7 L/hr
AIR CIRCULATION HIGH		930 m3/hr
MAXIMUM CURRENT	Cool	15.7 A
	Heat	15.7 A

FAN MOTOR

POWER SOURCE		240 V
INDOOR UNIT, Discrimination		MFF-24RVL
INDOOR UNIT Cool	High	960 r.p.m.
	Medium	850 r.p.m.
	Low	650 r.p.m.
	Quiet	500 r.p.m.
INDOOR UNIT Heat	High	960 r.p.m.
	Medium	880 r.p.m.
	Low	740 r.p.m.
	Quiet	580 r.p.m.
OUTDOOR UNIT, Discrimination		MFE-60TVT
OUTDOOR UNIT, Cool		850 r.p.m.
OUTDOOR UNIT, Heat		850 r.p.m.

NOISE LEVEL

INDOOR UNIT Cool	High	49 dB
	Medium	44 dB
	Low	36 dB
	Quiet	30 dB
INDOOR UNIT Heat	High	49 dB
	Medium	45 dB
	Low	40 dB
	Quiet	33 dB
OUTDOOR UNIT, Cool		53 dB
OUTDOOR UNIT, Heat		54 dB

COMPRESSOR AND REFRIGERANT

TYPE		Hermetic type, 4 pole, DC inverter motor, Rotary
DISCRIMINATION		N-TF30ND1A
WEIGHT WITH OIL		15.3 kg
PRECHARGED REFRIGERANT		2,100 g
REFRIGERANT TYPE		R410A
FULL CHARGE Pipe length	20 m	2,100 g
	30 m	2,300 g
ADDITIONAL REFRIGERANT		20 g/m
MAXIMUM PIPING HEIGHT		30 m

DIMENSIONS

INDOOR UNIT	H x W x D	245 x 570 x 570 mm
OUTDOOR UNIT	H x W x D	830 x 900 x 330 mm

WEIGHT

INDOOR UNIT	Shipping / Net	19 kg / 16 kg
OUTDOOR UNIT	Shipping / Net	67 kg / 60 kg

DIMENSIONS

Unit : mm

DECORATION PANEL

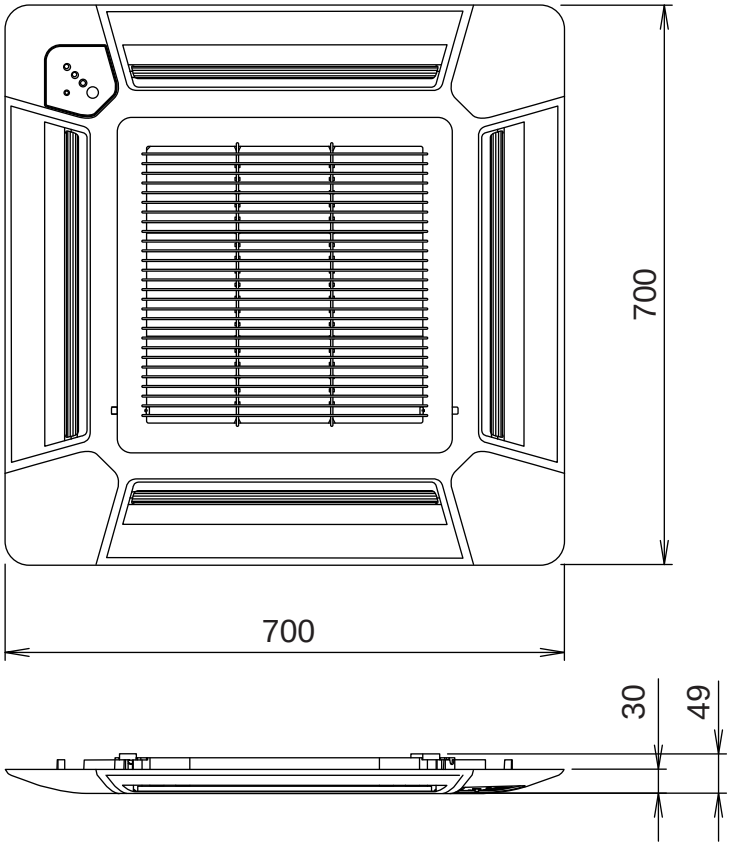

INDOOR UNIT

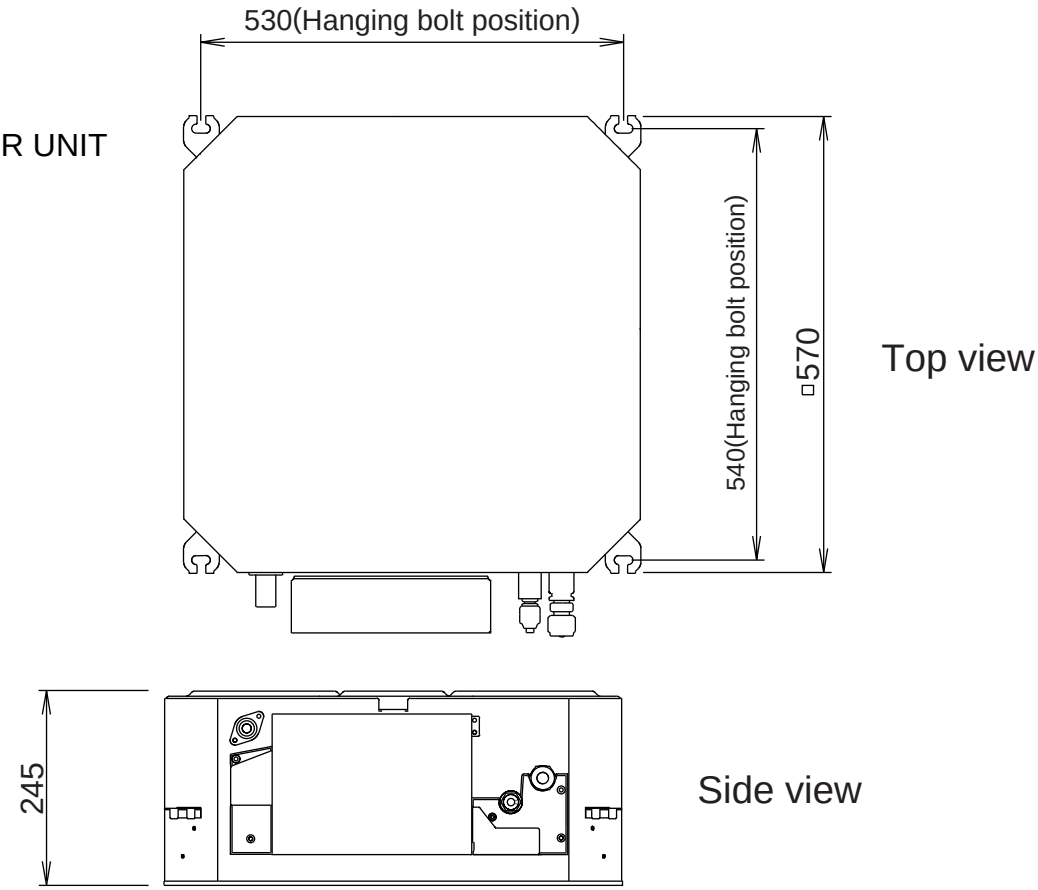

Unit : mm

OUTDOOR UNIT

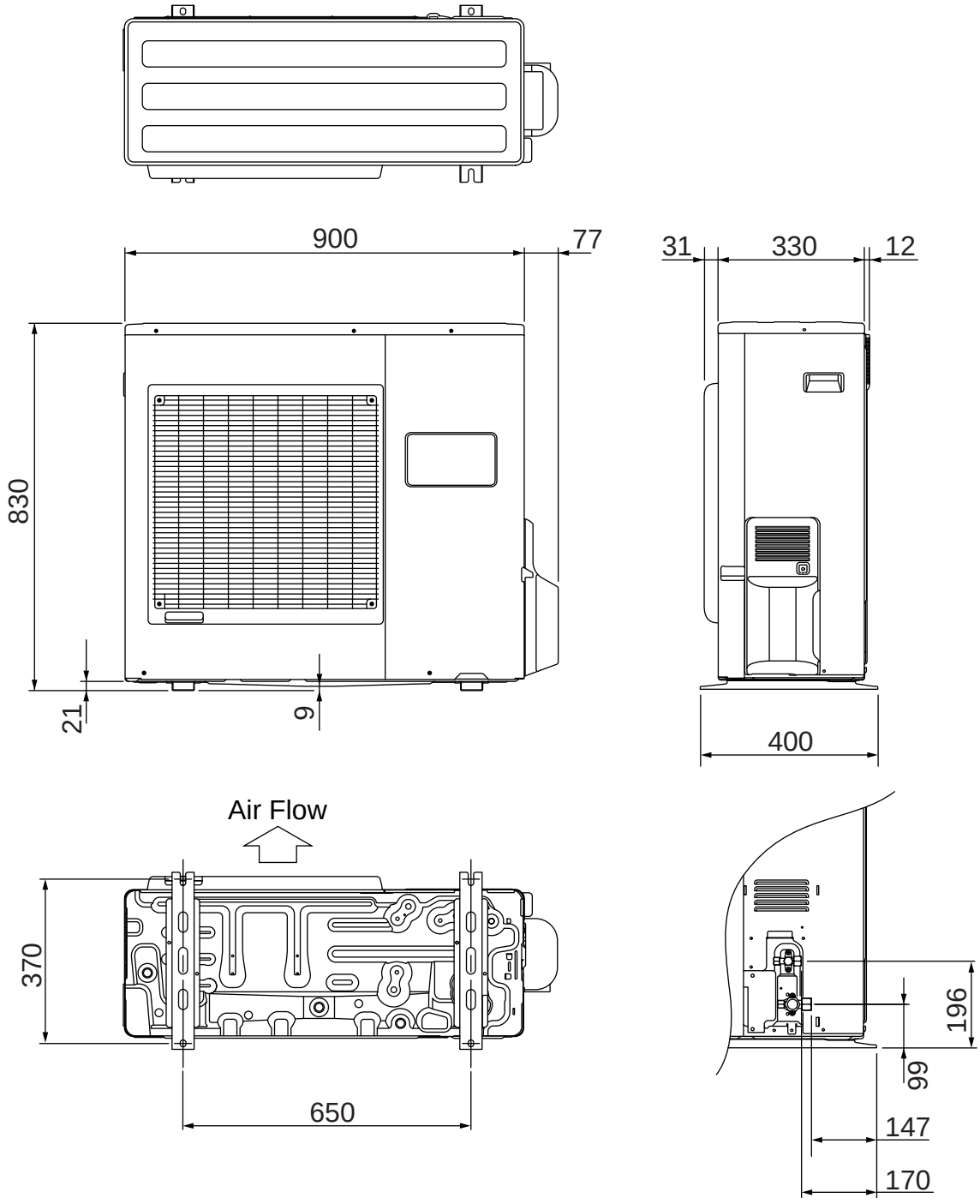

REFRIGERANT SYSTEM DIAGRAM

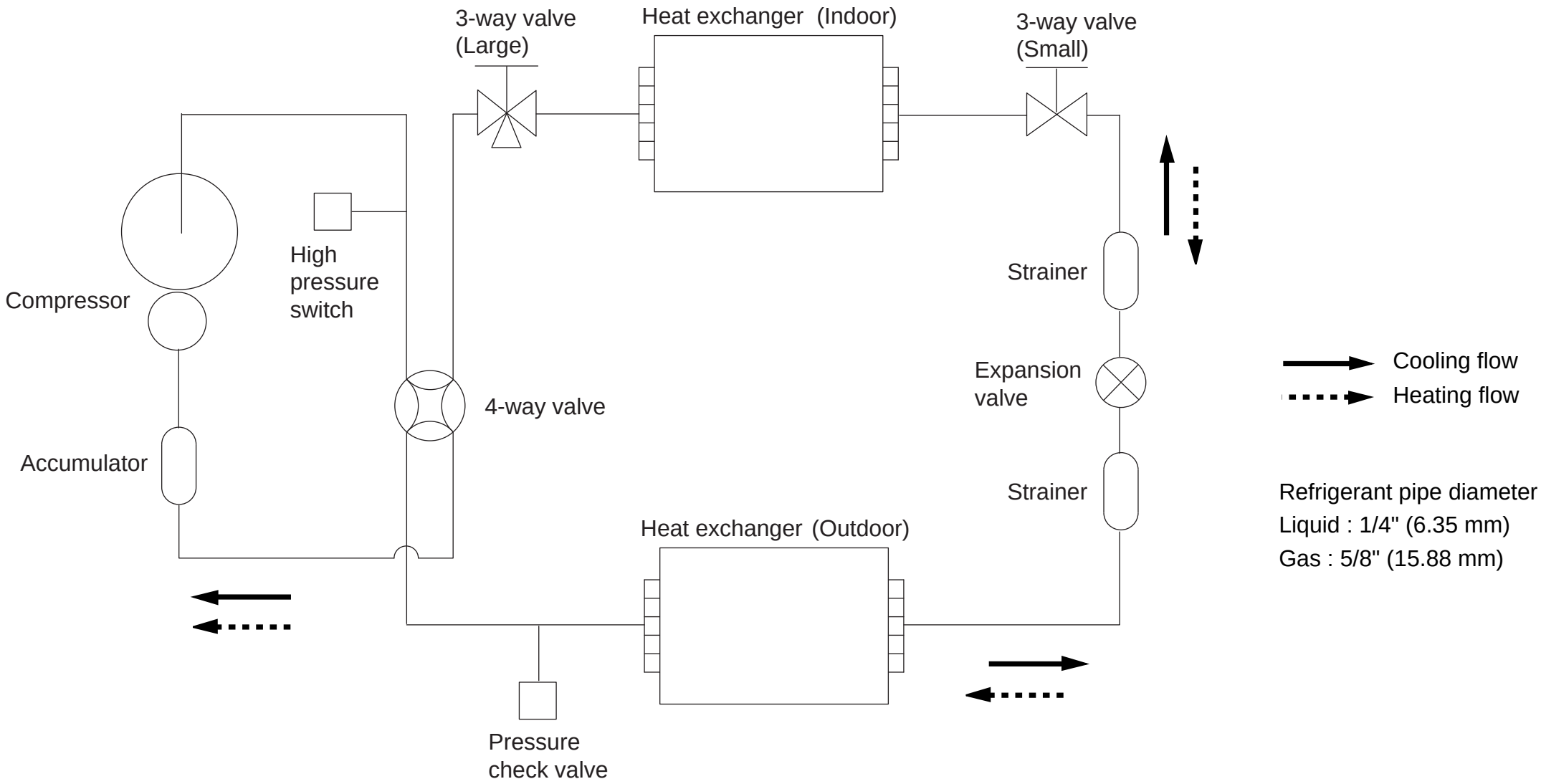

CIRCUIT DIAGRAM

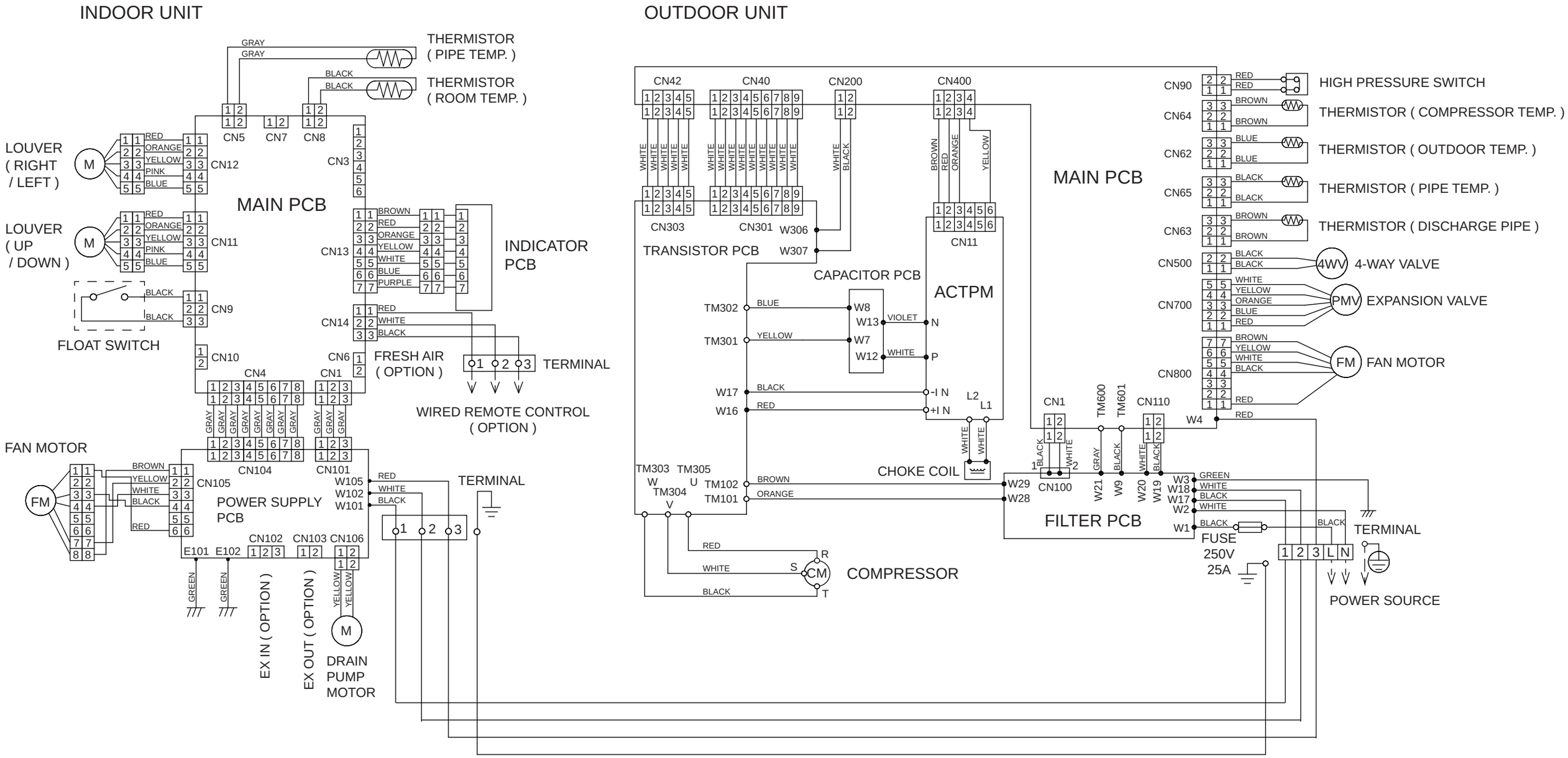

INDOOR PRINTED CIRCUIT BOARD
CIRCUIT DIAGRAM

CONTROL UNIT
EZ-01131HSE

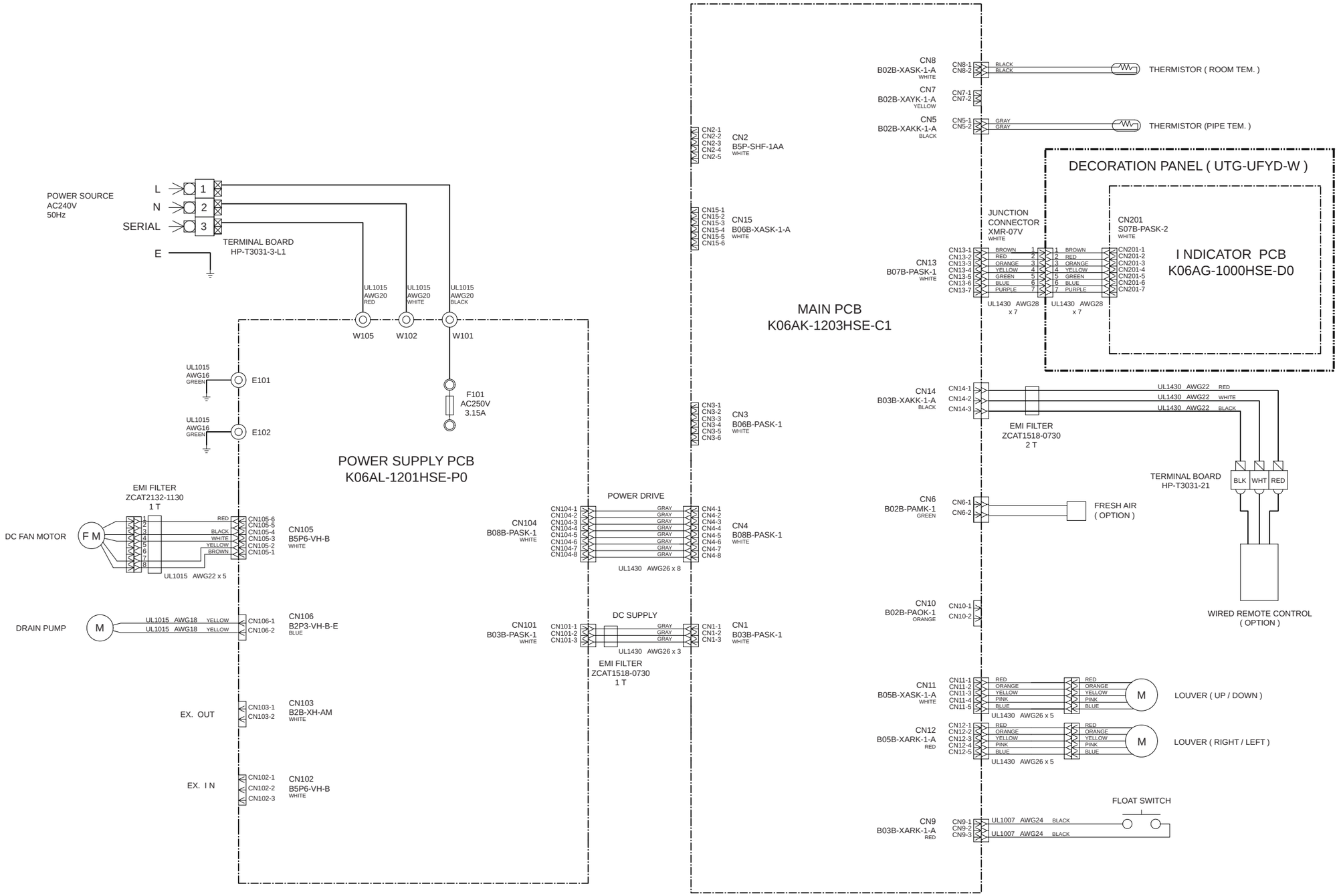

INDOOR UNIT

MAIN PCB
K06AK-1203HSE-C1

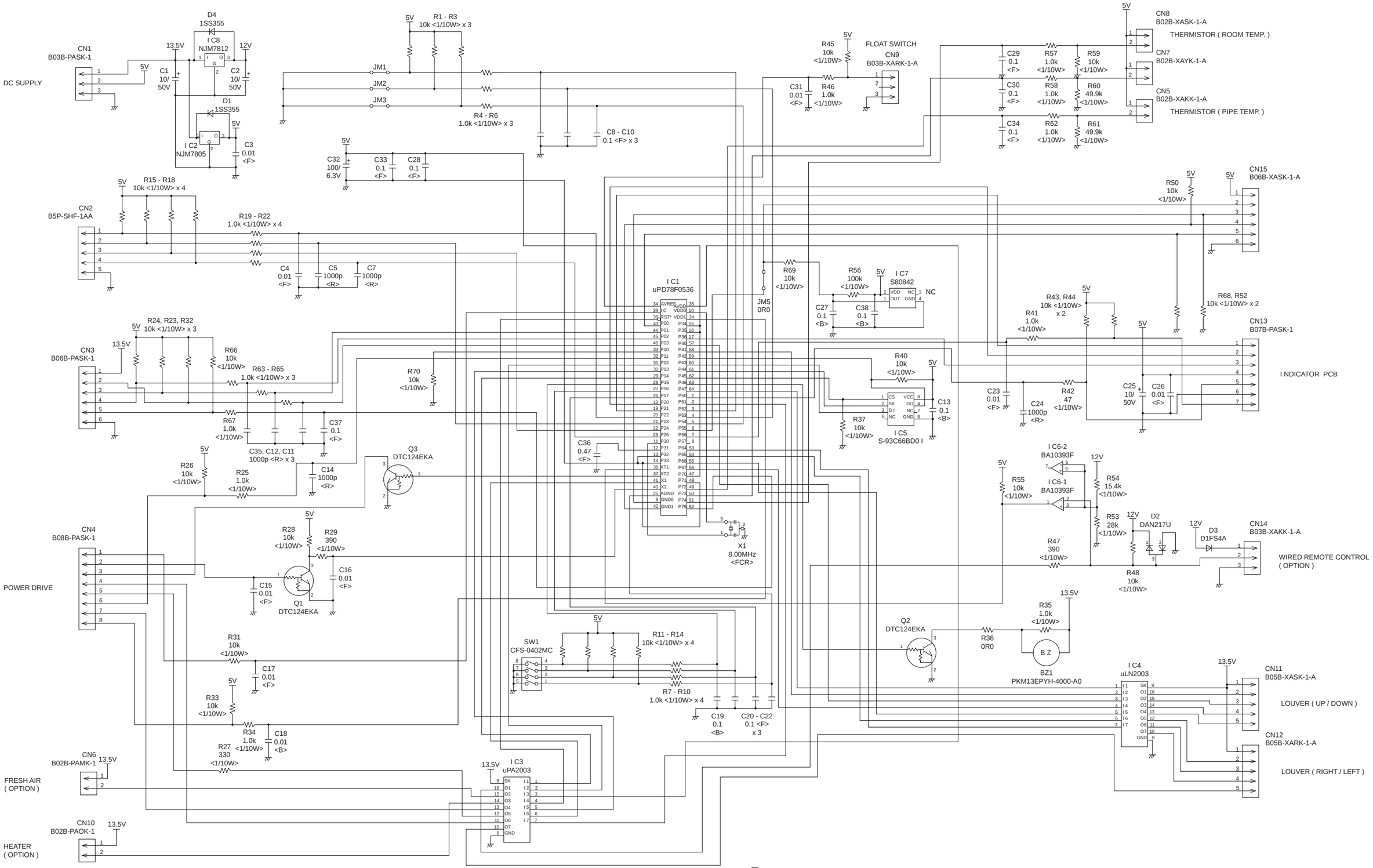

INDOOR UNIT

POWER SUPPLY PCB
K06AL-1201HSE-P0

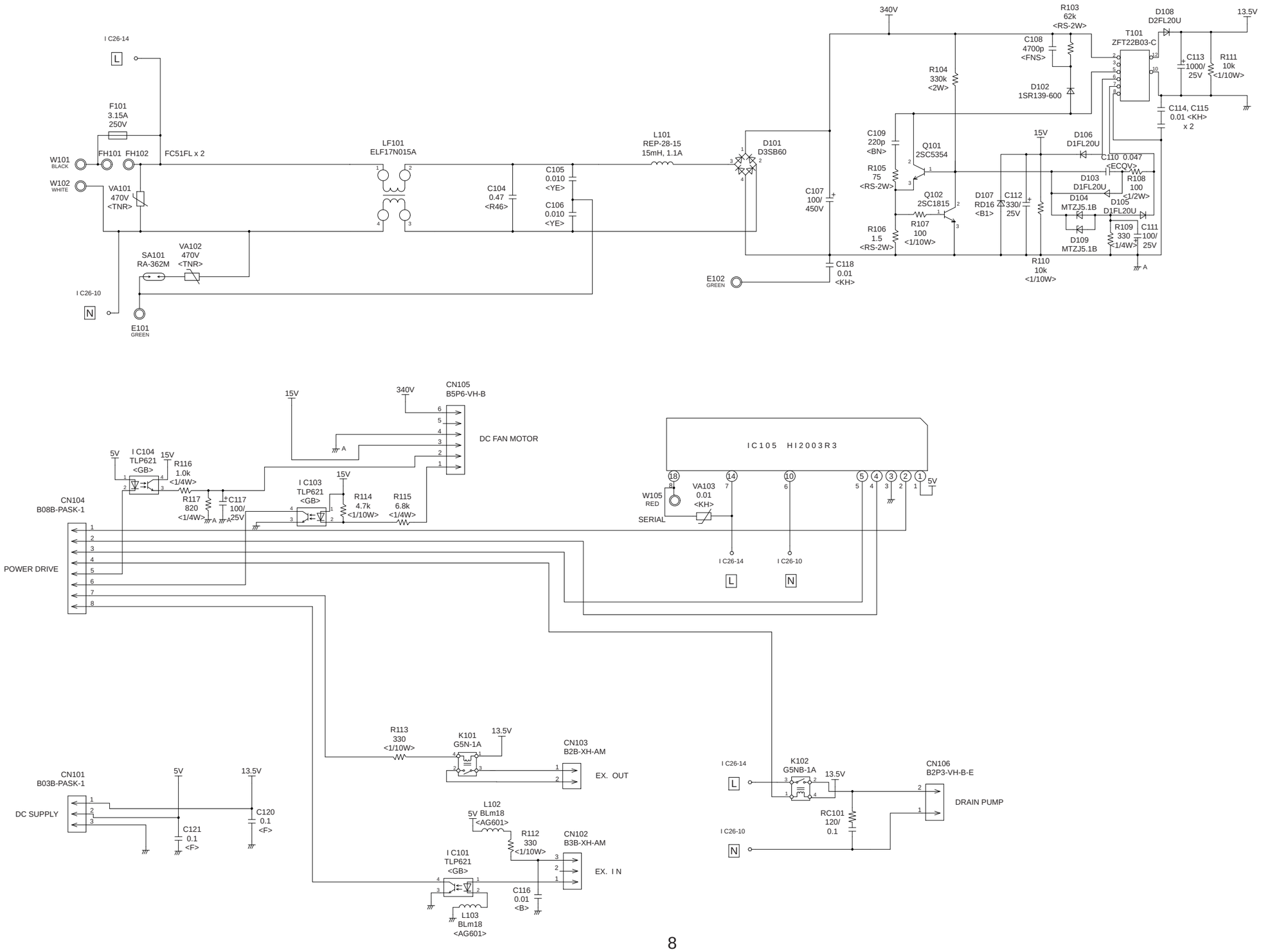

INDOOR UNIT

I NDICATOR PCB
K06AG-1000HSE-D0

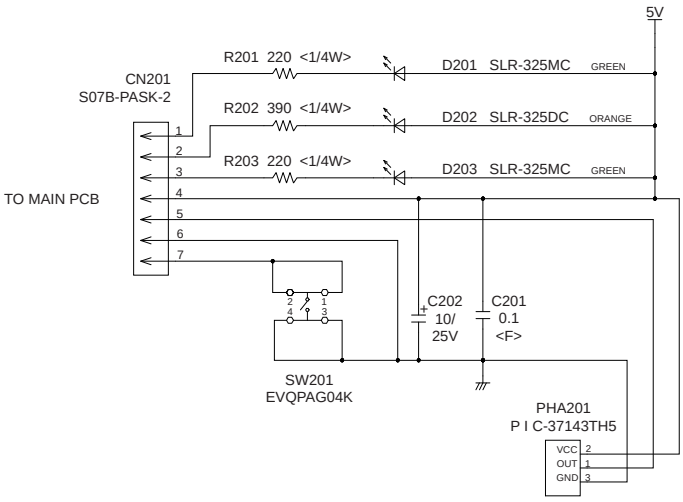

OUTDOOR PCB CIRCUIT DIAGRAM

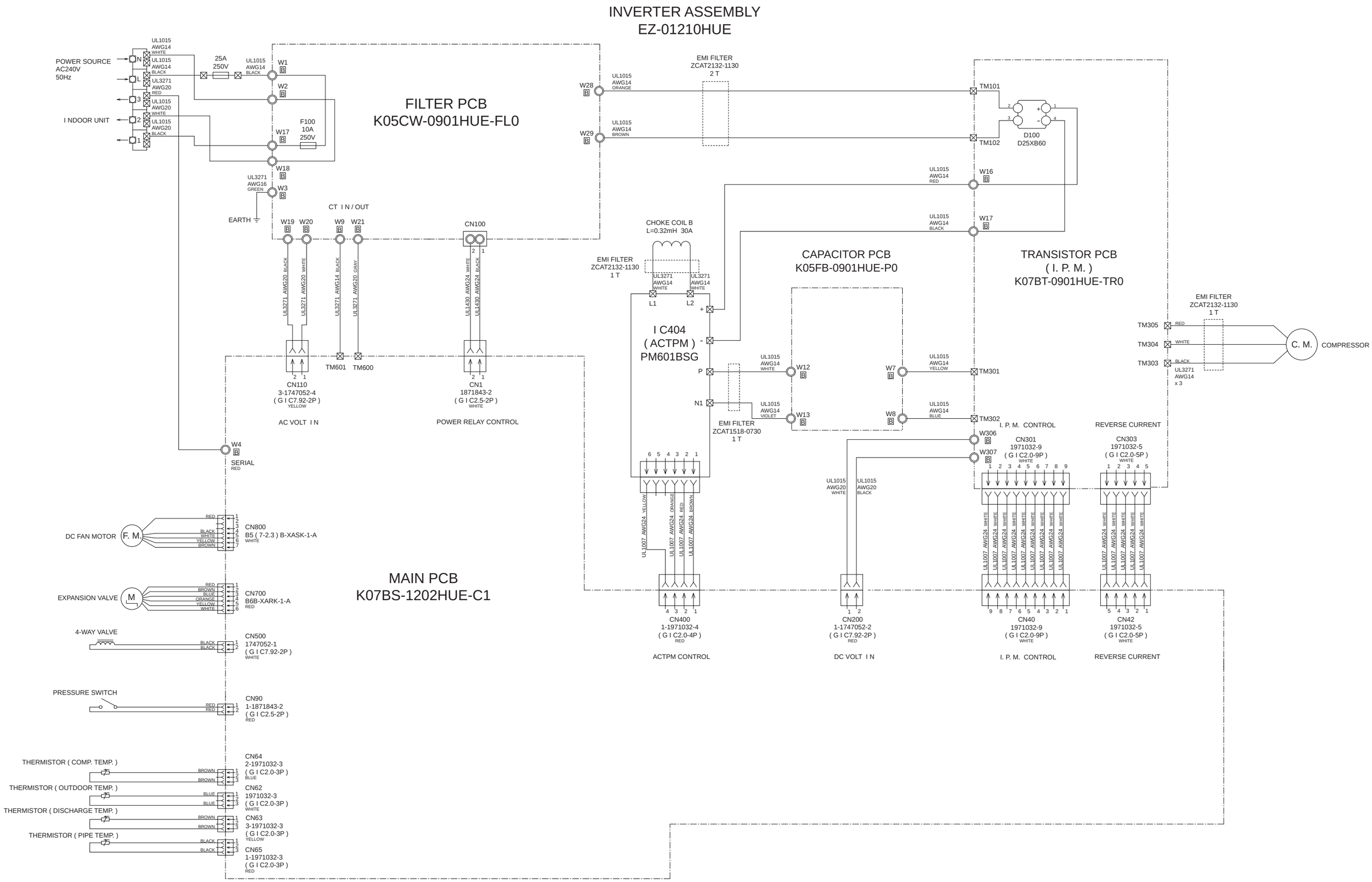

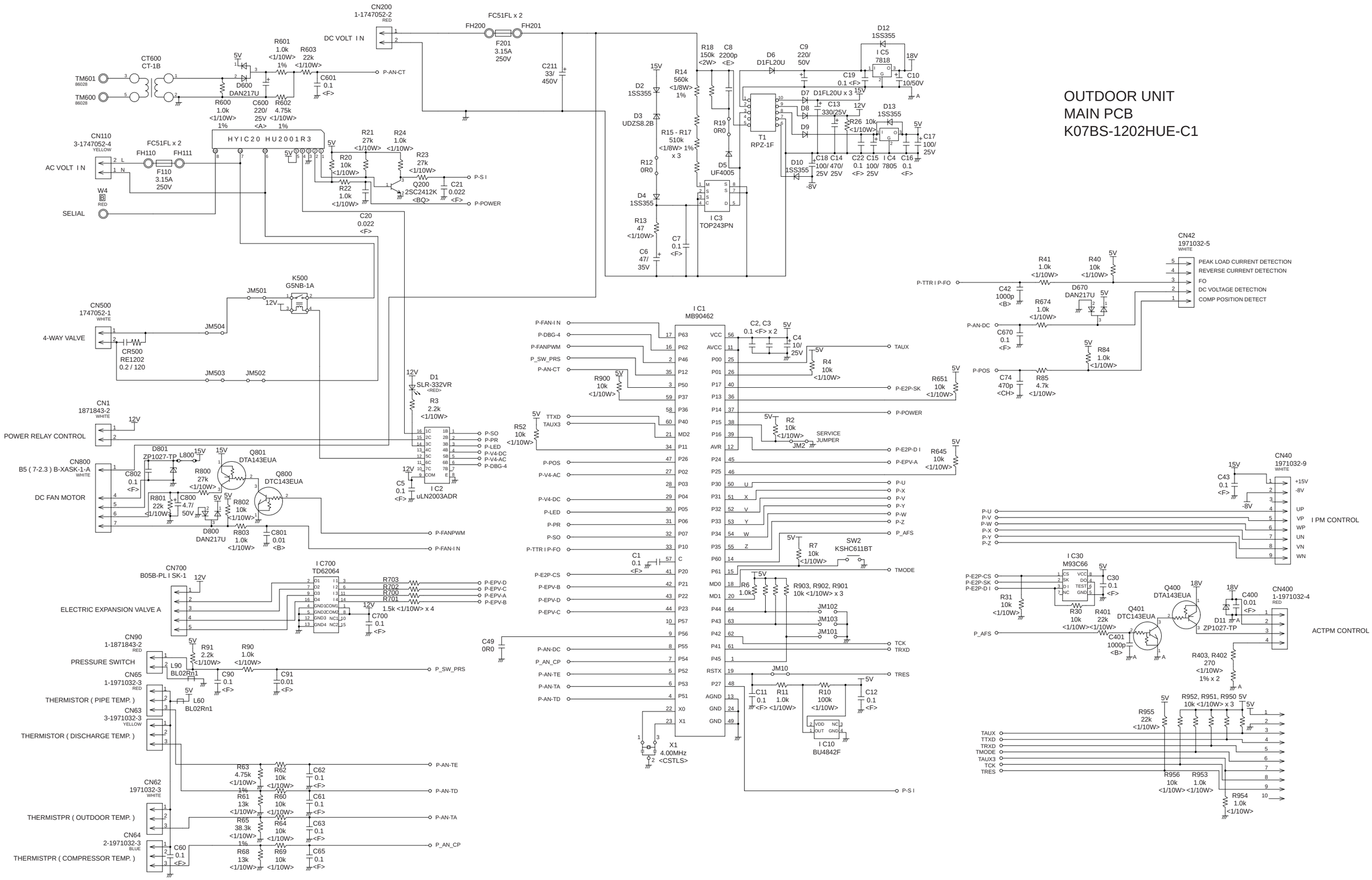
OUTDOOR UNIT
MAIN PCB
K07BS-1202HUE-C1
CN200
1-1747052-2
RED
DC VOLT I N
FC51FL x 2
FH200
FH201
F201
3.15A
250V
C211
33/
450V
CT600
CT-1B
TM601
86028
TM600
86028
D600
DAN217U
R600
1.0k
<1/10W>
1%
R601
1.0k
<1/10W>
1%
R603
22k
<1/10W>
C601
0.1
<F>
P-AN-CT
C600
220/
25V
<A>
R602
4.75k
<1/10W>
1%
CN110
3-1747052-4
YELLOW
AC VOLT I N
FC51FL x 2
FH110
FH111
F110
3.15A
250V
W4
RED
SELIAL
HYIC20 HU2001R3
R20
10k
<1/10W>
R21
27k
<1/10W>
R24
1.0k
<1/10W>
R23
27k
<1/10W>
R22
1.0k
<1/10W>
Q200
2SC2412K
<BQ>
C21
0.022
<F>
P-S I
P-POWER
C20
0.022
<F>
D2
1SS355
D3
UDZS8.2B
D4
1SS355
R12
0R0
R13
47
<1/10W>
C6
47/
35V
R14
560k
<1/8W>
1%
R15 - R17
510k
<1/8W> 1%
x 3
C7
0.1
<F>
R18
150k
<2W>
C8
2200p
<E>
R19
0R0
D5
UF4005
I C3
TOP243PN
D6
D1FL20U
C9
220/
50V
T1
RPZ-1F
D7
D8
D9
D1FL20U x 3
C13
330/25V
R26
10k
<1/10W>
D10
1SS355
-8V
C18
100/
25V
C14
470/
25V
C22
0.1
<F>
C15
100/
25V
I C4
7805
C16
0.1
<F>
D12
1SS355
I C5
7818
18V
C19
0.1 <F>
15V
C10
10/50V
A
D13
1SS355
C17
100/
25V
CN42
1971032-5
WHITE
PEAK LOAD CURRENT DETECTION
REVERSE CURRENT DETECTION
FO
DC VOLTAGE DETECTION
COMP POSITION DETECT
P-TTR I P-FO
R41
1.0k
<1/10W>
R40
10k
<1/10W>
C42
1000p
<B>
D670
DAN217U
R674
1.0k
<1/10W>
P-AN-DC
C670
0.1
<F>
R84
1.0k
<1/10W>
P-POS
C74
470p
<CH>
R85
4.7k
<1/10W>
CN500
1747052-1
WHITE
4-WAY VALVE
CR500
RE1202
0.2 / 120
JM501
JM504
JM503
JM502
K500
G5NB-1A
12V
CN1
1871843-2
WHITE
POWER RELAY CONTROL
CN800
B5 (7-2.3) B-XASK-1-A
WHITE
DC FAN MOTOR
D801
ZP1027-TP
L800
Q801
DTA143EUA
Q800
DTC143EUA
R800
27k
<1/10W>
R801
22k
<1/10W>
C800
4.7/
50V
R802
10k
<1/10W>
D800
DAN217U
R803
1.0k
<1/10W>
C801
0.01
<B>
C802
0.1
<F>
P-FANPWM
P-FAN-I N
D1
SLR-332VR
<RED>
R3
2.2k
<1/10W>
P-SO
P-PR
P-LED
P-V4-DC
P-V4-AC
P-DBG-4
C5
0.1
<F>
I C2
uLN2003ADR
I C1
MB90462
P-FAN-I N
P-DBG-4
P-FANPWM
P_SW_PRS
P-AN-CT
R900
10k
<1/10W>
TTXD
TAUX3
R52
10k
<1/10W>
P-POS
P-V4-AC
P-V4-DC
P-LED
P-PR
P-SO
P-TTR I P-FO
P-E2P-CS
P-EPV-B
P-EPV-D
P-EPV-C
P-AN-DC
P_AN_CP
P-AN-TE
P-AN-TA
P-AN-TD
C2, C3
0.1 <F> x 2
C4
10/
25V
R4
10k
<1/10W>
TAUX
P-E2P-SK
P-POWER
R651
10k
<1/10W>
R2
10k
<1/10W>
JM2
SERVICE
JUMPER
P-E2P-D I
P-EPV-A
R645
10k
<1/10W>
P-U
P-X
P-V
P-Y
P-W
P-Z
P_AFS
R7
10k
<1/10W>
SW2
KSHC611BT
TMODE
R6
1.0k
R903, R902, R901
10k <1/10W> x 3
JM102
JM103
JM101
TCK
TRXD
TRES
P-S I
C1
0.1
<F>
C49
0R0
JM10
C11
0.1
<F>
R11
1.0k
<1/10W>
R10
100k
<1/10W>
C12
0.1
<F>
I C10
BU4842F
X1
4.00MHz
<CSTLS>
CN40
1971032-9
WHITE
C43
0.1
<F>
15V
-8V
+15V
-8V
UP
VP
WP
UN
VN
WN
I PM CONTROL
I C30
M93C66
C30
0.1
<F>
R31
10k
<1/10W>
R30
10k
<1/10W>
R401
22k
<1/10W>
C401
1000p
<B>
Q400
DTA143EUA
Q401
DTC143EUA
18V
C400
0.01
<F>
D11
ZP1027-TP
CN400
1-1971032-4
RED
ACTPM CONTROL
R403, R402
270
<1/10W>
1% x 2
R955
22k
<1/10W>
R952, R951, R950
10k <1/10W> x 3
R956
10k
<1/10W>
R953
1.0k
<1/10W>
R954
1.0k
<1/10W>
TAUX
TTXD
TRXD
TMODE
TAUX3
TCK
TRES
CN700
B05B-PL I SK-1
ELECTRIC EXPANSION VALVE A
I C700
TD62064
R703
R702
R700
R701
1.5k <1/10W> x 4
C700
0.1
<F>
P-EPV-D
P-EPV-C
P-EPV-A
P-EPV-B
CN90
1-1871843-2
RED
PRESSURE SWITCH
R91
2.2k
<1/10W>
R90
1.0k
<1/10W>
L90
BL02Rn1
C90
0.1
<F>
C91
0.01
<F>
P_SW_PRS
CN65
1-1971032-3
RED
THERMISTOR (PIPE TEMP.)
L60
BL02Rn1
CN63
3-1971032-3
YELLOW
THERMISTOR (DISCHARGE TEMP.)
CN62
1971032-3
WHITE
THERMISTPR (OUTDOOR TEMP.)
CN64
2-1971032-3
BLUE
THERMISTPR (COMPRESSOR TEMP.)
R63
4.75k
<1/10W>
1%
R62
10k
<1/10W>
C62
0.1
<F>
R61
13k
<1/10W>
R60
10k
<1/10W>
C61
0.1
<F>
R65
38.3k
<1/10W>
1%
R64
10k
<1/10W>
C63
0.1
<F>
R68
13k
<1/10W>
R69
10k
<1/10W>
C65
0.1
<F>
C60
0.1
<F>
P-AN-TE
P-AN-TD
P-AN-TA
P_AN_CP

OUTDOOR UNIT
TRANSISTOR PCB (I P M)
K07BT-0901HUE-TR0

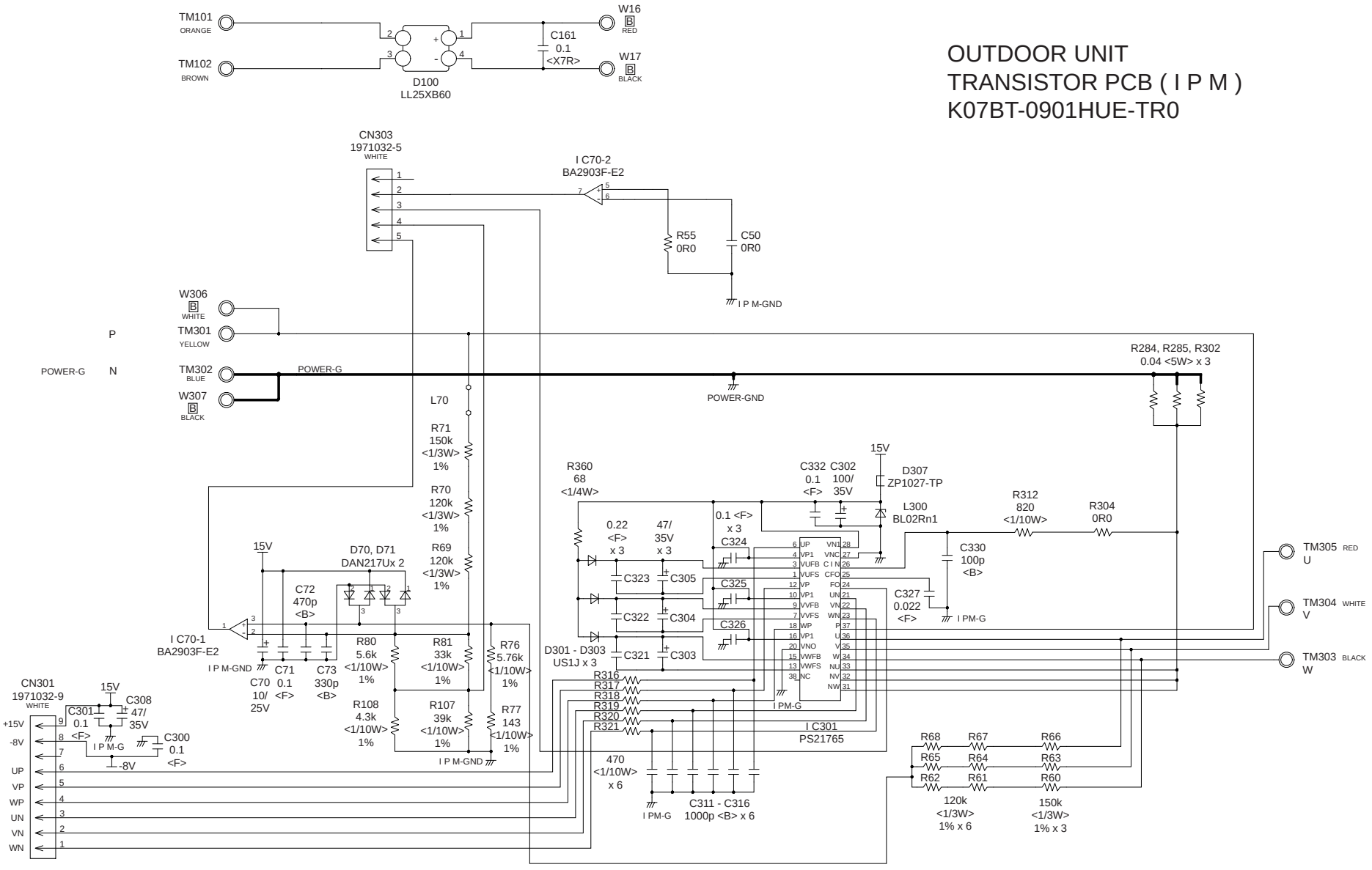

OUTDOOR UNIT
CAPACITOR PCB
K05FB-0901HUE-P0

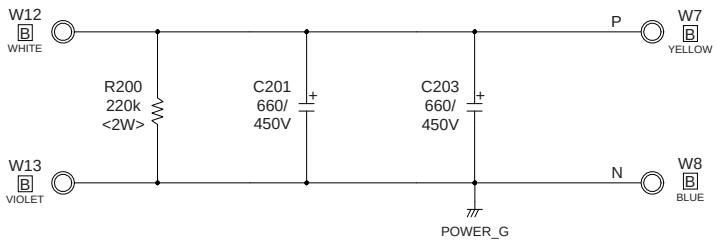

OUTDOOR UNIT
FILTER PCB
K05CW-0901HUE-FL0

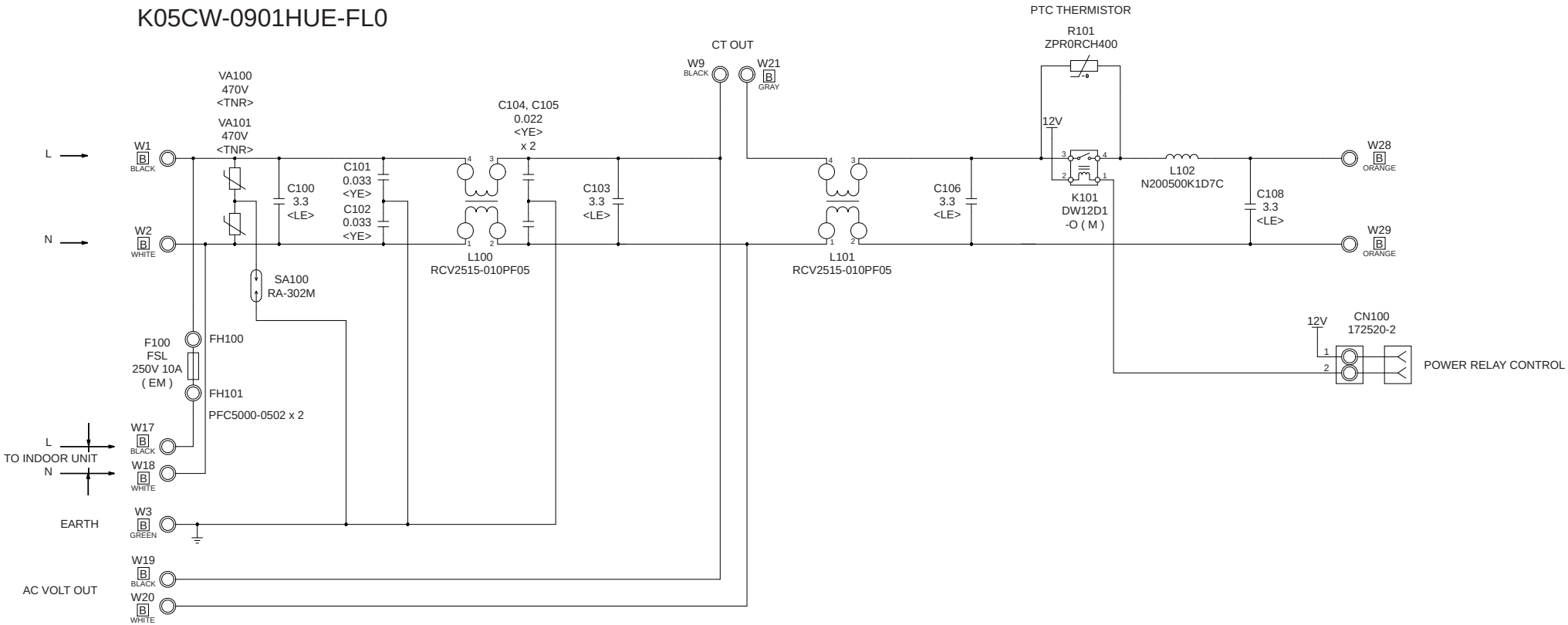

ERROR DETECTION

INDOOR UNIT and WIRED REMOTE CONTROL

INDOOR UNIT

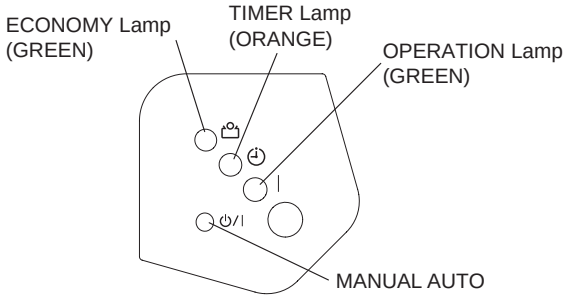

Troubleshooting with a wired remote control

If an error occurs,
the following display will be shown.
("Er" will appear in the
set room temperature display.)

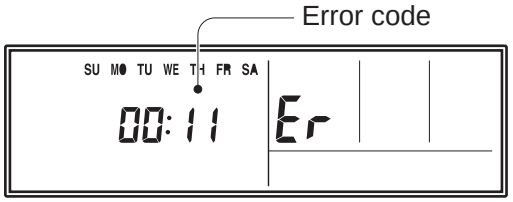

EX. Self-diagnosis

● : 0.5s on / 0.5s off

◇ : 0.1s on / 0.1s off

( ) : Number of flashing

Indoor unit LED			Wired remote control	Description
OPERATION (green)	TIMER (orange)	ECONOMY (green)		
● (1)	● (1)	◇	11	Serial communication error
● (1)	● (2)	◇	12	Wired remote control communication error
● (1)	● (5)	◇	15	Check run unfinished
● (2)	● (1)	◇	21	Unit number or Refrigerant circuit address setting error [Simultaneous Multi]
● (2)	● (2)	◇	22	Indoor unit capacity error
● (2)	● (3)	◇	23	Combination error
● (2)	● (4)	◇	24	• Connection unit number error (indoor slave unit) [Simultaneous Multi] • Connection unit number error (indoor unit or branch unit) [Flexible Multi]
● (2)	● (7)	◇	27	Master unit, slave unit set-up error [Simultaneous Multi]
● (3)	● (2)	◇	32	Indoor unit PCB model information error
● (3)	● (5)	◇	35	Manual auto switch error
● (4)	● (1)	◇	41	Inlet air temp. sensor error
● (4)	● (2)	◇	42	Indoor unit Heat Ex. Middle temp. sensor error
● (5)	● (1)	◇	51	Indoor unit fan motor error
● (5)	● (3)	◇	53	Drain pump error
● (5)	● (7)	◇	57	Damper error
● (5)	● (15)	◇	5U	Indoor unit error
● (6)	● (2)	◇	62	Outdoor unit main PCB model information error or communication error
● (6)	● (3)	◇	63	Inverter error
● (6)	● (4)	◇	64	Active filter error, PFC circuit error
● (6)	● (5)	◇	65	Trip terminal L error

Indoor unit LED			Wired remote control	Description
OPERATION (green)	TIMER (orange)	ECONOMY (green)		
● (6)	● (10)	◇	6A	Display PCB microcomputers communication error
● (7)	● (1)	◇	71	Discharge temp. sensor error
● (7)	● (2)	◇	72	Compressor temp. sensor error
● (7)	● (3)	◇	73	Outdoor unit Heat Ex. liquid temp. sensor error
● (7)	● (4)	◇	74	Outdoor temp. sensor error
● (7)	● (5)	◇	75	Suction Gas temp. sensor error
● (7)	● (6)	◇	76	• 2-way valve temp. sensor error • 3-way valve temp. sensor error
● (7)	● (7)	◇	77	Heat sink temp. sensor error
● (8)	● (2)	◇	82	• Sub-cool Heat Ex. gas inlet temp. sensor error • Sub-cool Heat Ex. gas outlet temp. sensor error
● (8)	● (3)	◇	83	Liquid pipe temp. sensor error
● (8)	● (4)	◇	84	Current sensor error
● (8)	● (6)	◇	86	• Discharge pressure sensor error • Suction pressure sensor error • High pressure switch error
● (9)	● (4)	◇	94	Trip detection
● (9)	● (5)	◇	95	Compressor rotor position detection error (permanent stop)
● (9)	● (7)	◇	97	Outdoor unit fan motor error
● (9)	● (9)	◇	99	4-way valve error
● (10)	● (1)	◇	A1	Discharge temp. error
● (10)	● (3)	◇	A3	Compressor temp. error
● (10)	● (4)	◇	A4	High pressure error
● (10)	● (5)	◇	A5	Low pressure error
● (13)	● (2)	◇	J2	Branch boxes error [Flexible Multi]

PARTS

DECORATION PANEL
UTG-UFYD-W

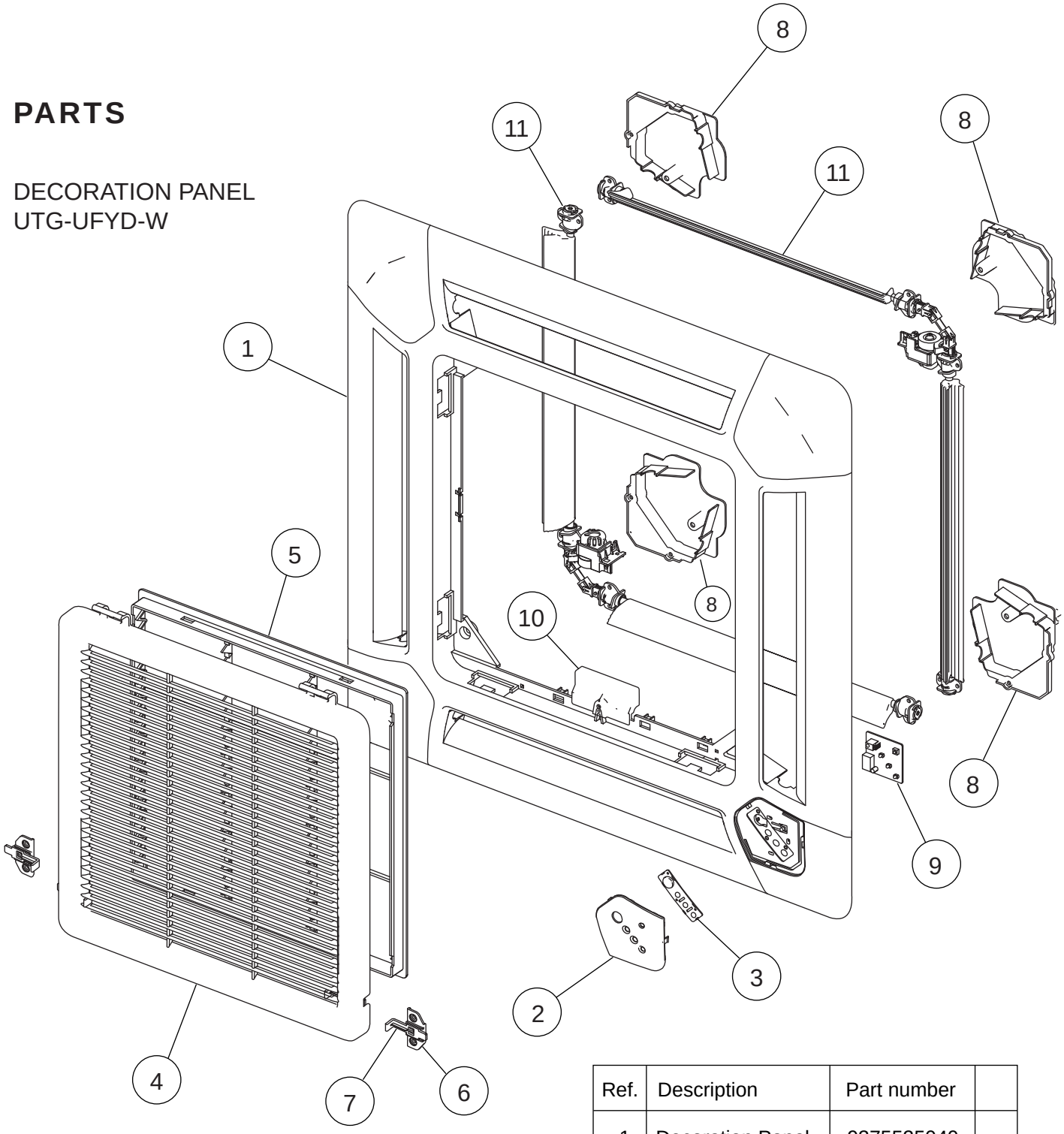

Ref.	Description	Part number	
1	Decoration Panel	9375525040	
2	Display Panel	9375529123	
3	Receiver Window	9375547011	
4	Intake Grille	9375531027	
5	Long Life Filter	9375533014	
6	Hook Bracket	9375546014	
7	Grille Hook	9375532024	
8	Panel Cover	9375530013	
9	Indicator PCB	9707371031	
10	Connector Cover	9375549015	
11	Flap Total Assy	9377760029	

DECORATION PANEL
UTG-UFYD-W

Flap total assy
Motor holder assy

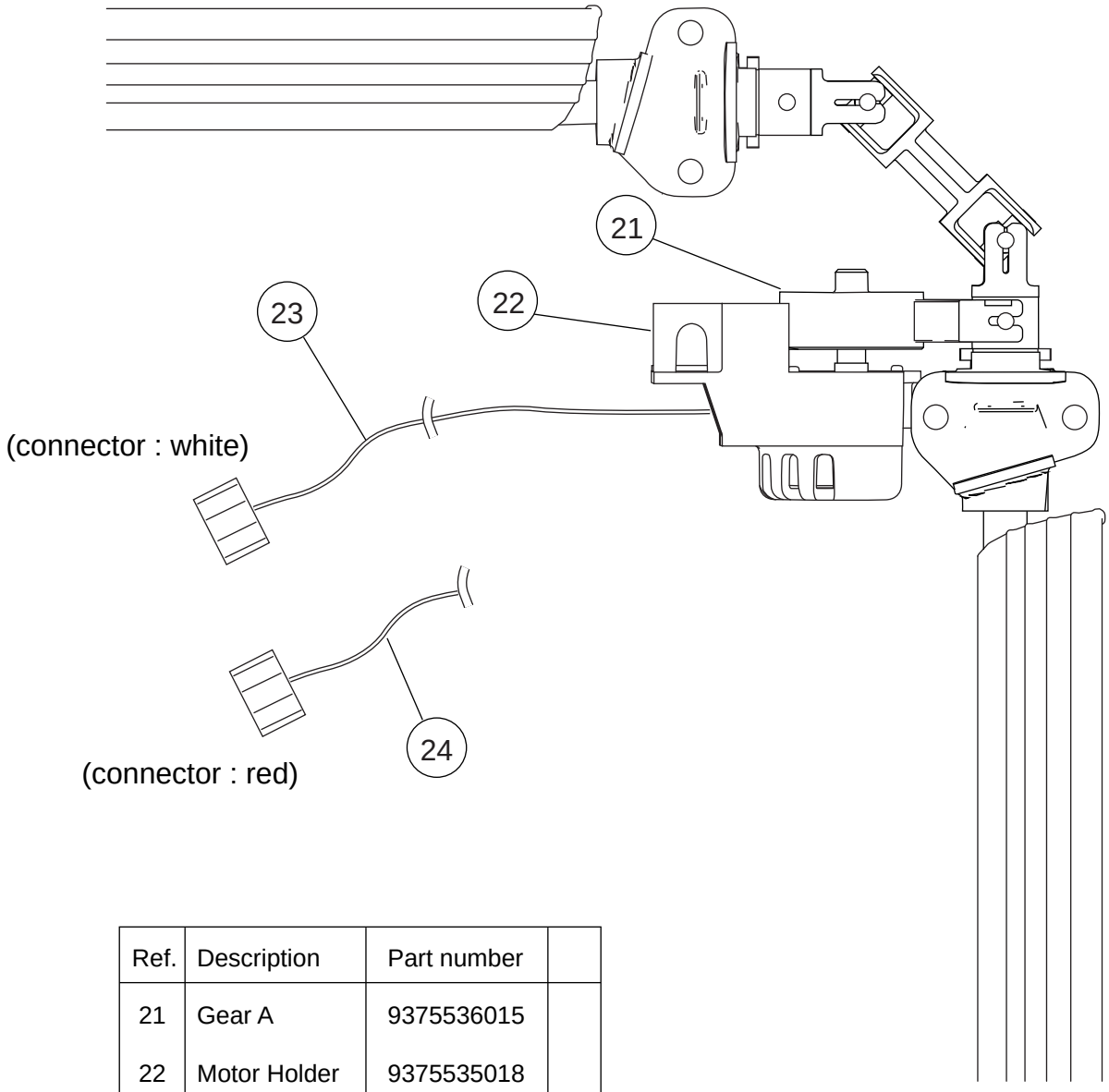

Ref.	Description	Part number	
21	Gear A	9375536015	
22	Motor Holder	9375535018	
23	Step Motor	9900139070	
24	Step Motor	9900139087	

PARTS

INDOOR UNIT

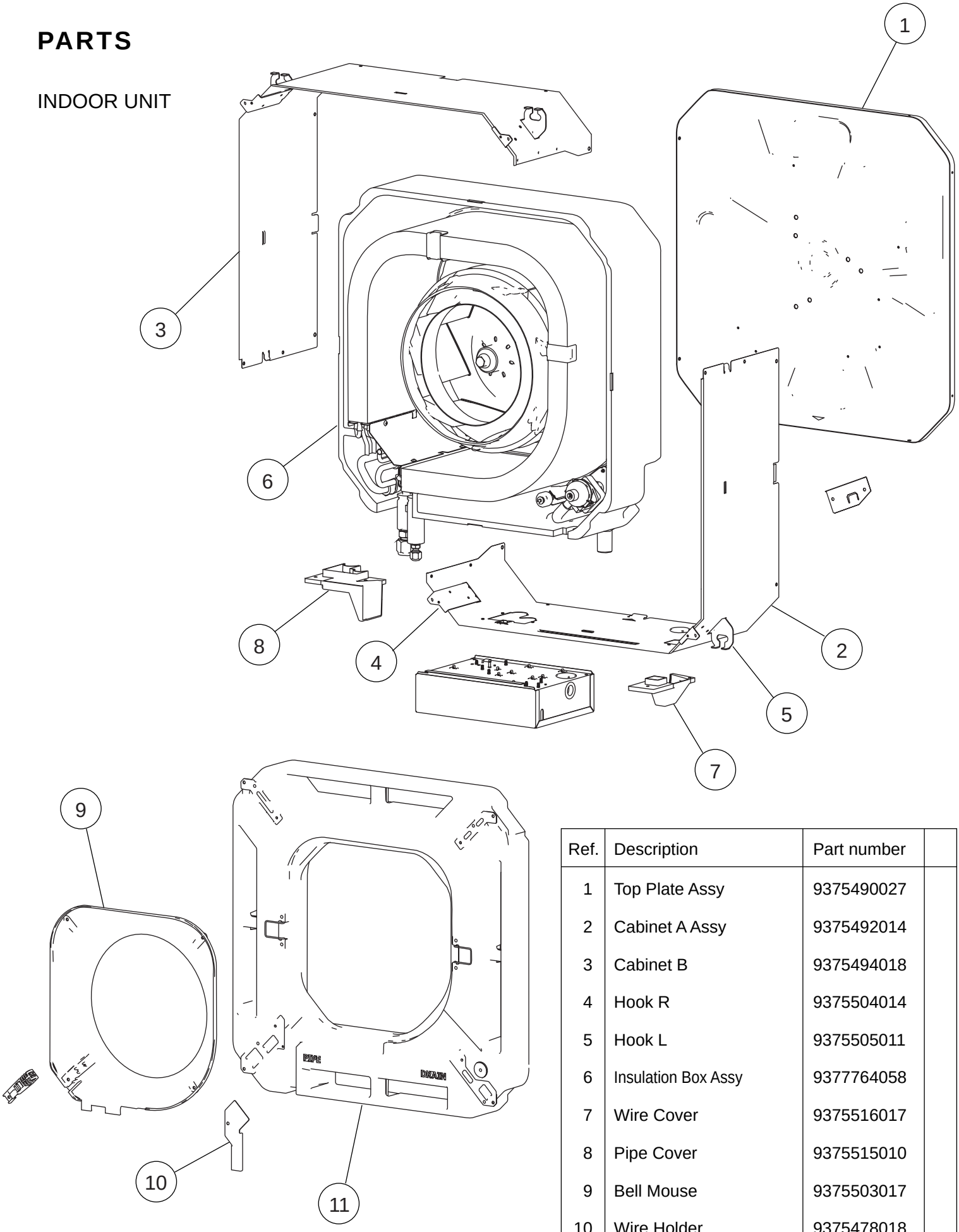

Ref.	Description	Part number	
1	Top Plate Assy	9375490027	
2	Cabinet A Assy	9375492014	
3	Cabinet B	9375494018	
4	Hook R	9375504014	
5	Hook L	9375505011	
6	Insulation Box Assy	9377764058	
7	Wire Cover	9375516017	
8	Pipe Cover	9375515010	
9	Bell Mouse	9375503017	
10	Wire Holder	9375478018	
11	Drain Pan Sub Assy	9377765017	

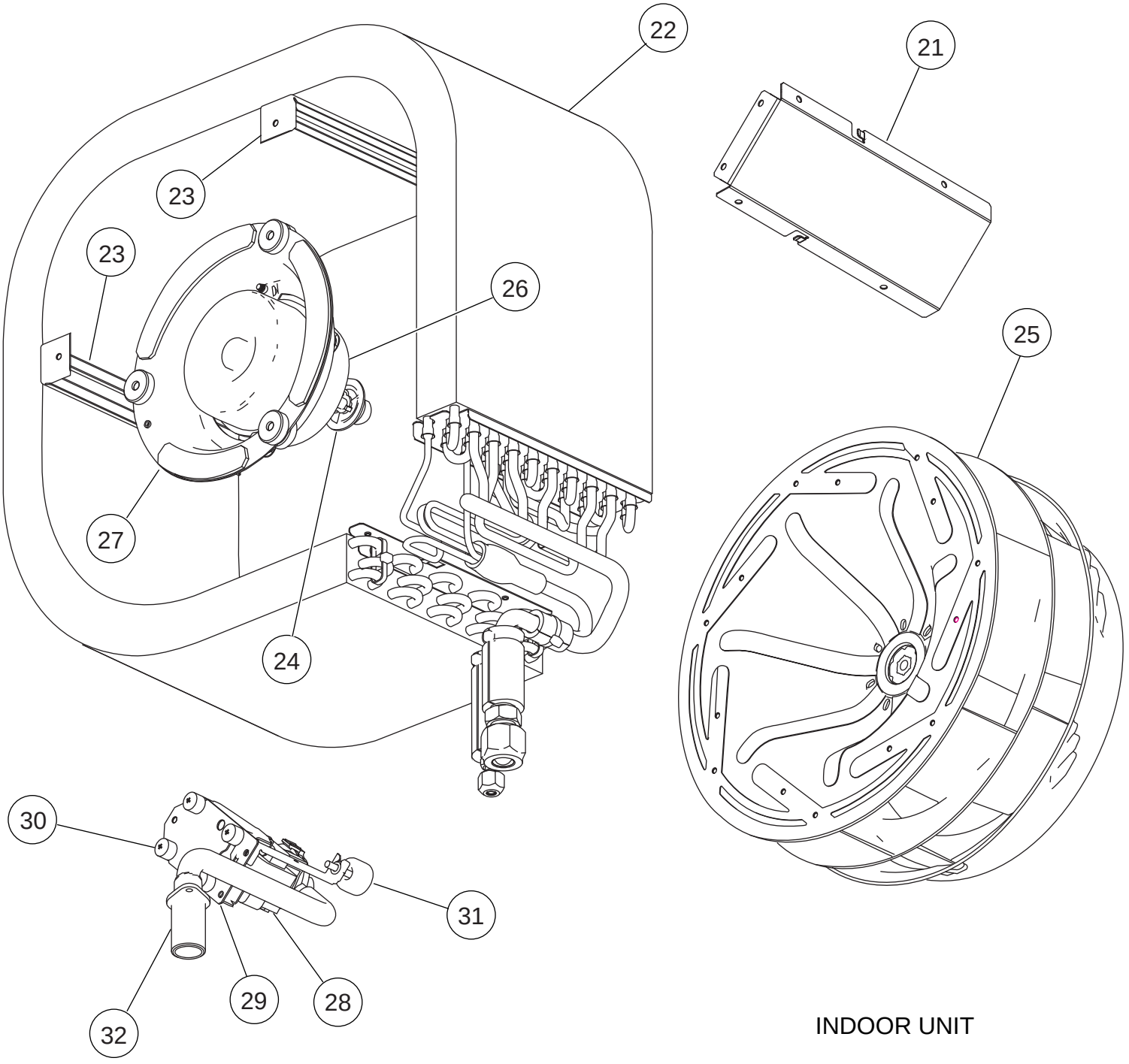

INDOOR UNIT

Ref.	Description	Part number	
21	Separate Wall	9375506018	
22	Evaporator Total Assy	9377914019	
23	Evaporator Holder	9375507015	
24	Turbo Fan Washer	9375487010	
25	2 Stage Turbo Fan Assy	9375480011	
26	Fan Motor	9602436019	

Ref.	Description	Part number	
27	Fan Motor Holder	9375552015	
28	Pump Assy	9900472030	
29	Drain Pump Holder B	9375518011	
30	Rubber (Pump)	9378426016	
31	Float Switch	9900361037	
32	Drain Port Sub Assy	9375718015	

INDOOR UNIT

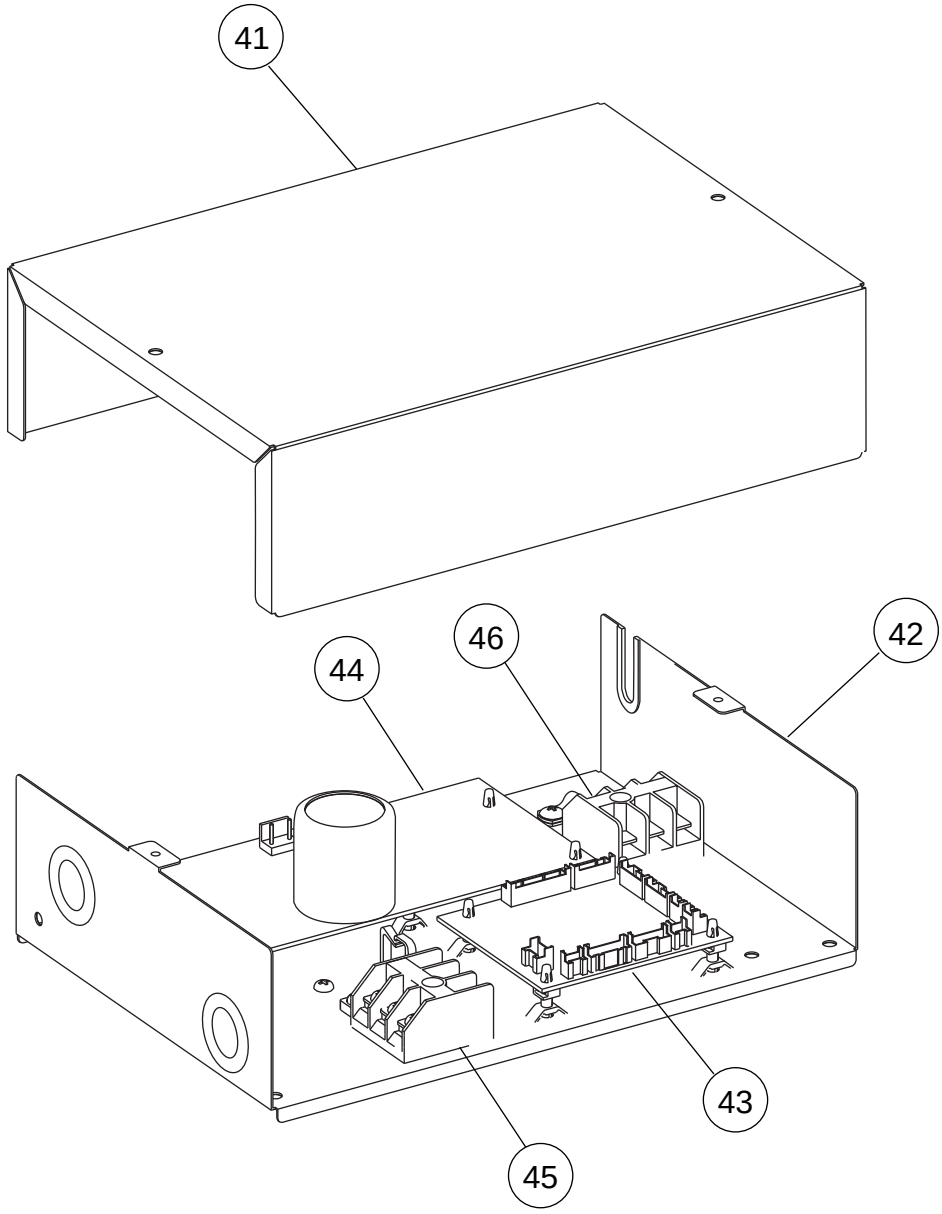

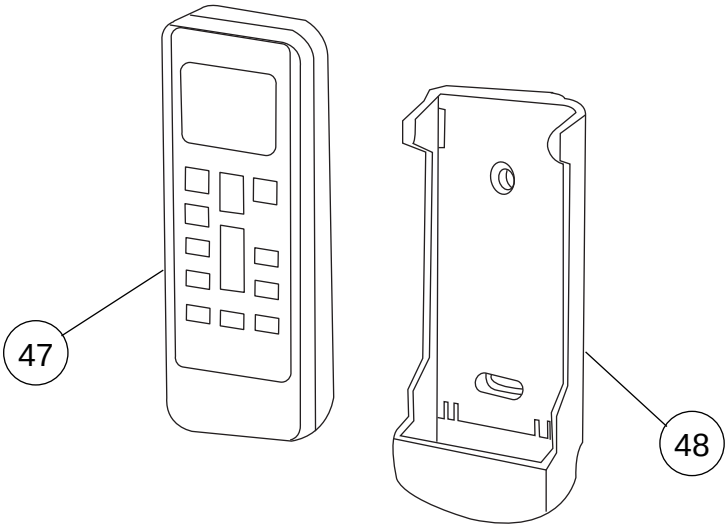

Ref.	Description	Part number	
41	Control Box Cover	9375512019	
42	Control Box A	9375511012	
43	Main PCB	9709245149	
44	Power Supply PCB	9707398380	
45	Terminal	9306489045	
46	Terminal	9703345012	
47	Remote Control	9379219006	
48	Remote Control Holder	9305642045	
--	Pipe Thermistor	9703297014	
--	Room Thermistor	9900502003	

PARTS

OUTDOOR UNIT

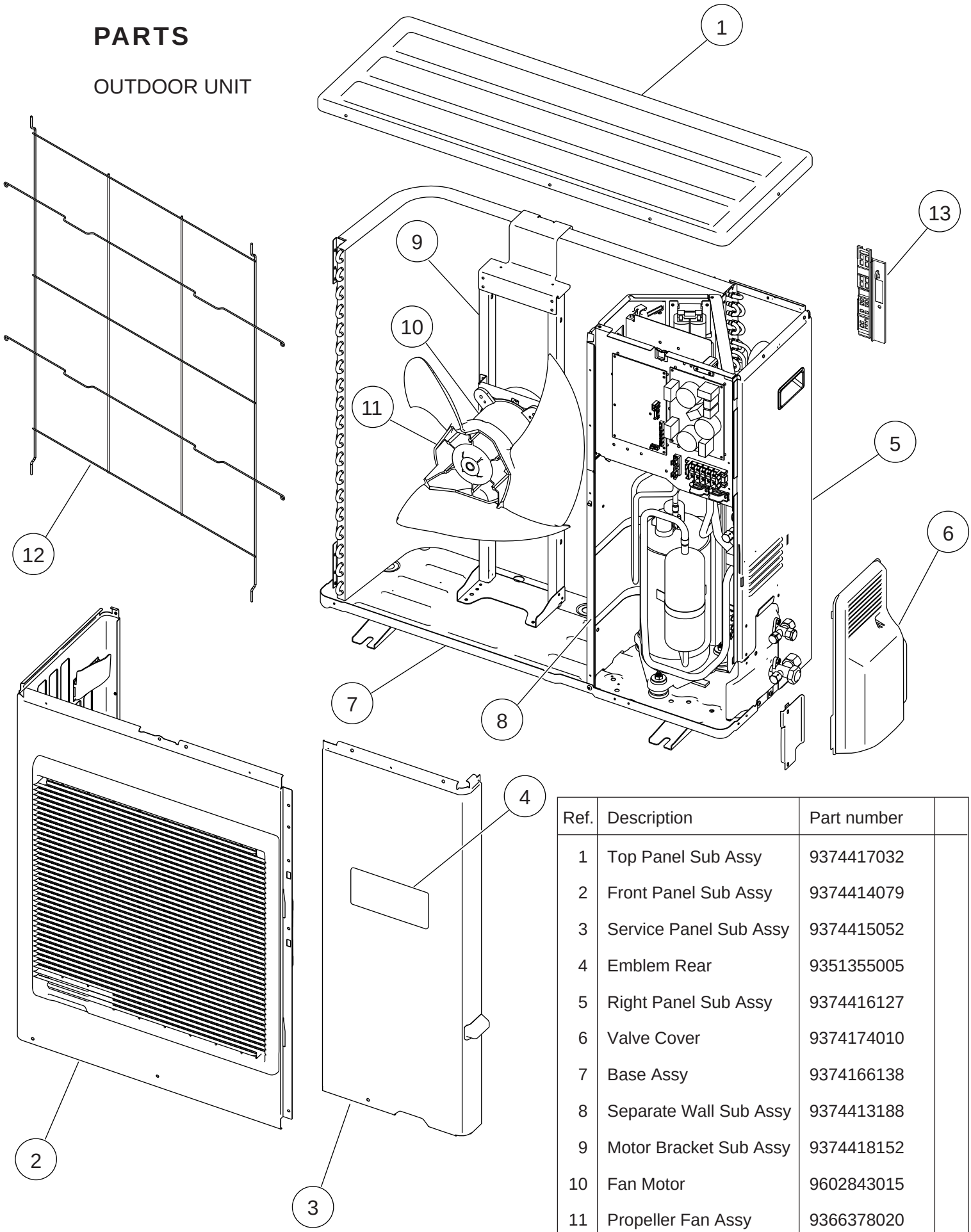

Ref.	Description	Part number	
1	Top Panel Sub Assy	9374417032	
2	Front Panel Sub Assy	9374414079	
3	Service Panel Sub Assy	9374415052	
4	Emblem Rear	9351355005	
5	Right Panel Sub Assy	9374416127	
6	Valve Cover	9374174010	
7	Base Assy	9374166138	
8	Separate Wall Sub Assy	9374413188	
9	Motor Bracket Sub Assy	9374418152	
10	Fan Motor	9602843015	
11	Propeller Fan Assy	9366378020	
12	Protective Net	9375381011	
13	Thermo Holder	9375211011	
--	Drain Assy	9303029015	
--	Drain Cap	313166024302	

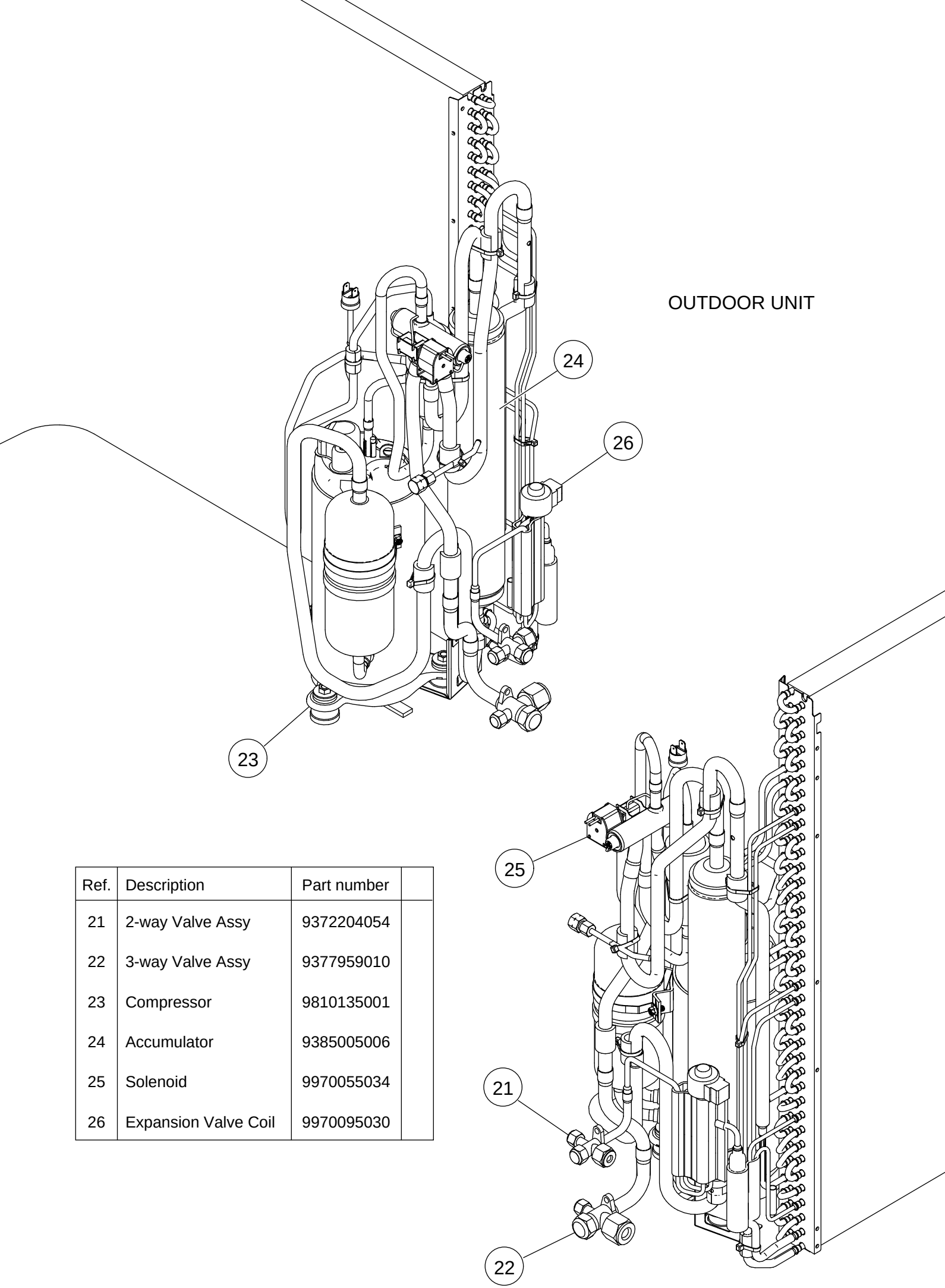

Ref.	Description	Part number	
21	2-way Valve Assy	9372204054	
22	3-way Valve Assy	9377959010	
23	Compressor	9810135001	
24	Accumulator	9385005006	
25	Solenoid	9970055034	
26	Expansion Valve Coil	9970095030	

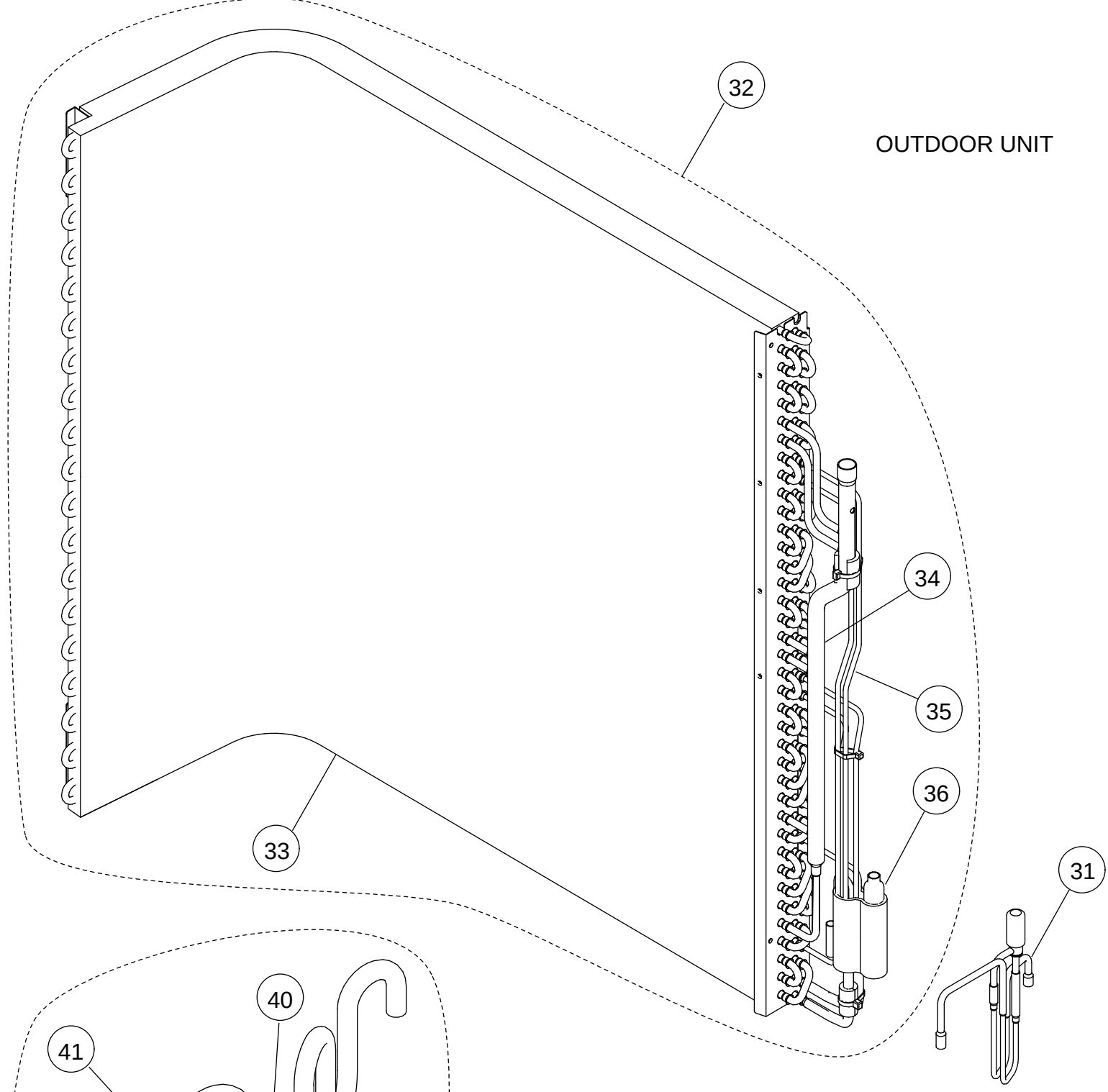

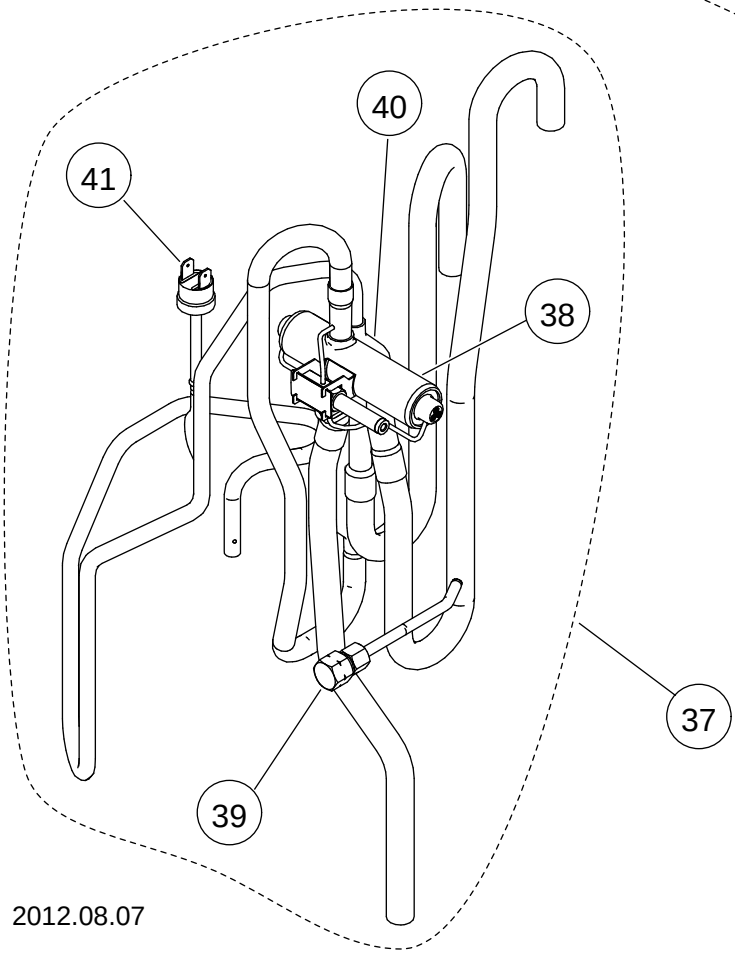

Ref.	Description	Part number	
31	Expansion Valve Assy	9370947168	
32	Condenser A Sub Assy	9374420308	
33	Condenser A Assy	9374433056	
34	Inlet Pipe (Cond) A Assy	9373461067	
35	Outlet Pipe (Cond) A Assy	9374266104	
36	Strainer Assy	9372524015	
37	4-way Valve Assy	9374425198	
38	4-way Valve	9900164010	
39	Check Joint Assy	9372802038	
40	Muffler	9372369050	
41	Pressure Switch	9900186012	

OUTDOOR UNIT

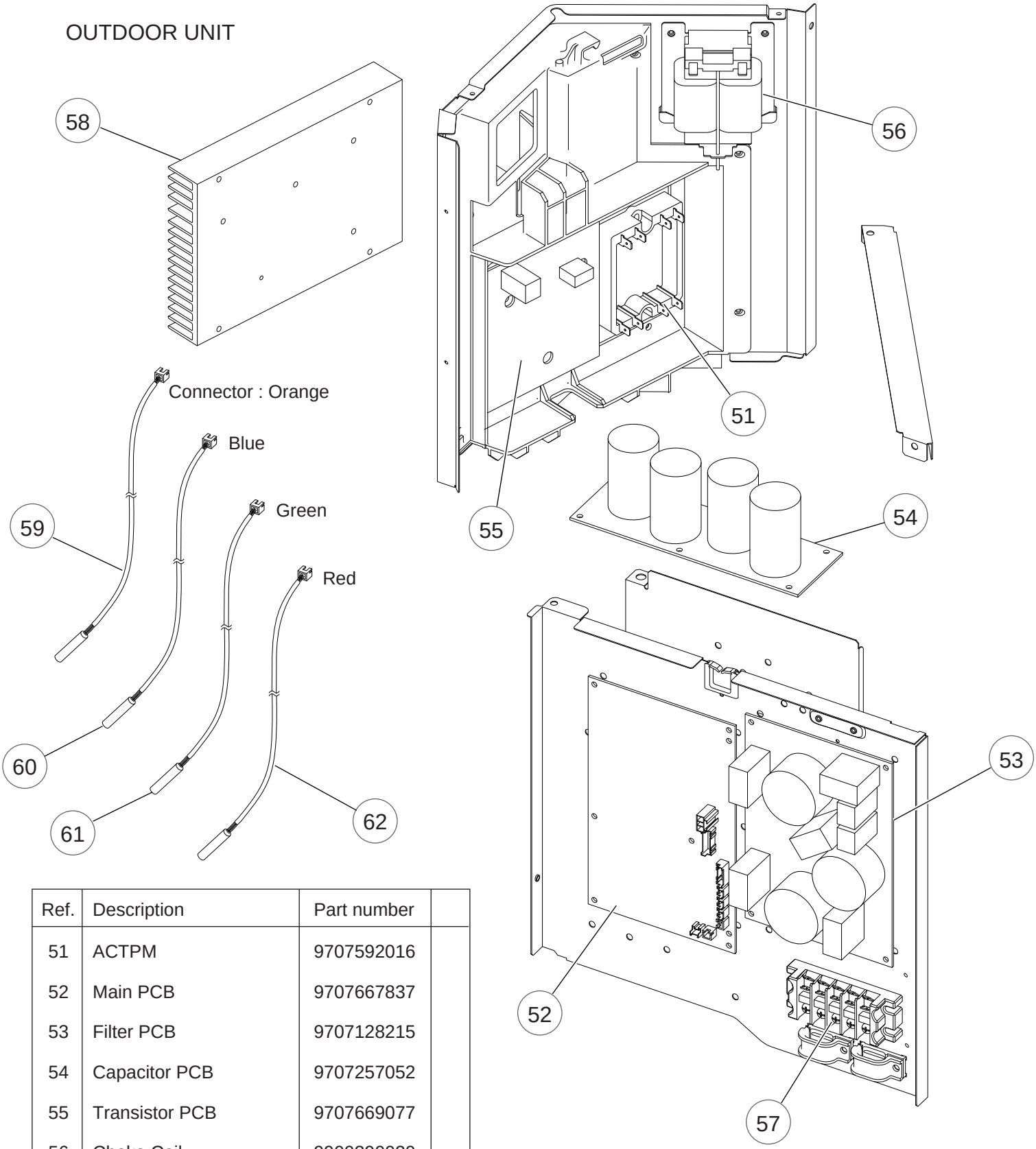

Ref.	Description	Part number	
51	ACTPM	9707592016	
52	Main PCB	9707667837	
53	Filter PCB	9707128215	
54	Capacitor PCB	9707257052	
55	Transistor PCB	9707669077	
56	Choke Coil	9900390020	
57	Terminal	9900203023	
58	Heat Sink	9378530010	
59	Discharge Thermistor	9900461003	
60	Outdoor Thermistor	9900463007	
61	Compressor Thermistor	9900466015	
62	Heat Exchanger Thermistor	9900462000	

ACCESSORIES

INDOOR UNIT

Name and Shape	Q'ty	Application
Coupler heat insulation (Large)	1	For indoor side pipe joint (Gas pipe)
Coupler heat insulation (Small)	1	For indoor side pipe joint (Liquid pipe)
Special nut A (Large flange)	4	For installing indoor unit
Special nut B (Small flange)	4	For installing indoor unit
Template (Carton top)	1	For cealing openings cutting Also used as packing
Drain hose	1	For installing drain pipe
Hose Band	1	For installing drain hose
Drain hose insulation	1	For installing drain pipe
Remote control	1	For air conditioner operation
Battery	2	For remote control
Remote control holder	1	For installing a remote control
Tapping screw (M3 × 12mm)	2	For mounting a remote control holder
Cable tie	2	For electrical wiring
Wire clamper	1	For electrical wiring

DECORATION PANEL UTG-UFYD-W

Name and Shape	Q'ty	Application
Connector cover	1	For covering connector
Tapping Screw (M5 × 12 mm)	4	For mounting decoration panel
Tapping Screw (M4 × 12 mm)	1	For mounting connector cover
L angle	2	For mounting a hook wire to a decoration panel
Hook wire	2	For suspending a decoration panel
Screw [pitch small] (M4 × 10 mm)	2	For mounting a hook wire (for metals)
Screw [pitch large] (M4 × 10 mm)	4	For mounting an L angle and hook wire (for resins)

OUTDOOR UNIT

Name and Shape	Part number
Drain pipe	9303029015
Drain cap	313166024302

INDOOR UNIT
OPTIONAL PARTS

Name and Shape	Model name	Use
Wired remote control 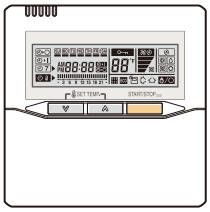	UTY-RNNYN	Unit control is performed by wired remote control
Simple remote control	UTY-RSNYN	Unit control is performed by simple remote control
Air outlet shutter plate	UTR-YDZB	Air outlet shutter plate is installed at the air outlet when 3-way direction is performed.
Insulation kit for high humidity 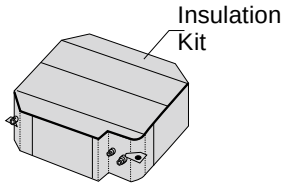	UTZ-KXGC	Install when the under roof condition is expected to be the humidity of over80 % and the temperature of over 30°C
Fresh air intake kit	UTZ-VXAA	It can be taken in fresh air of up to 10% of "high" air volume of the indoor unit by attaching Fresh Air Intake Kit to cassette type indoor unit.
Extrenal connect set 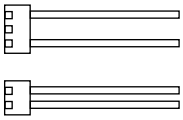	UTY-XWZX	Use to connect with various peripheral devices and air conditioner PCB.

1211G4137