FUJITSU

SPLIT TYPE
ROOM AIR CONDITIONER
CASSETTE TYPE

SERVICE MANUAL

Indoor unit	Outdoor unit
AUTG09LVLB	AOTG09LBCB
AUTG12LVLB	AOTG12LBCB
UTG-UFYD-W	

Refrigerant
R410A

CONTENTS

SPECIFICATIONS 1
DIMENSIONS 2
REFRIGERANT SYSTEM DIAGRAM 4
CIRCUIT DIAGRAM 5
PCB CIRCUIT DIAGRAM 6
ERROR DETECTION 8
PARTS (INDOOR UNIT) 9
PARTS (OUTDOOR UNIT) 17
ACCESSORIES 20

FUJITSU GENERAL LIMITED

SPECIFICATIONS

ELECTRICAL DATA

TYPE		Cooling & Heating	
INDOOR UNIT		AUTG09LVLB	AUTG12LVLB
DECORATION PANEL		UTG-UFYD-W	
OUTDOOR UNIT		AOTG09LBCB	AOTG12LBCB
POWER SOURCE		240 V, 50 Hz, Single phase	
Cooling	CAPACITY	2.60 kW	3.50 kW
	POWER CONSUMPTION	0.60 kW	0.91 kW
	EER	4.33 kW/kW	3.85 kW/kW
	OPERATING CURRENT	2.9 A	4.3 A
	MAXIMUM CURRENT	9.3 A	9.4 A
	DEHUMIDIFICATION	0.5 L/h	0.9 L/h
Heating	CAPACITY	3.50 kW	4.0 kW
	POWER CONSUMPTION	0.83 kW	0.98 kW
	COP	4.22 kW/kW	4.08 kW/kW
	OPERATING CURRENT	4.1 A	4.7 A
	MAXIMUM CURRENT	10.8 A	10.9 A

FAN MOTOR

INDOOR UNIT	MFF-24RVL
OUTDOOR UNIT	MFE-71TVAL

FAN REVOLUTION

INDOOR UNIT	High	590 rpm	C 660 / H 650
	Medium	540 rpm	580 rpm
	Low	490 rpm	520 rpm
	Quiet	440 rpm	460 rpm
OUTDOOR UNIT	Cooling	590 rpm	870 rpm
	Heating	720 rpm	780 rpm

AIR CIRCULATION

INDOOR UNIT	High	540 m3/h	610 m3/h
	Medium	490 m3/h	530 m3/h
	Low	440 m3/h	470 m3/h
	Quiet	390 m3/h	410 m3/h
OUTDOOR UNIT	Cooling	1,350 m3/h	2,050 m3/h
	Heating	1,680 m3/h	1,840 m3/h

NOISE LEVEL

INDOOR UNIT	High	C 33 / H 34	37 dB
	Medium	32 dB	33 dB
	Low	29 dB	31 dB
	Quiet	C 28 / H 27	28 dB
OUTDOOR UNIT	Cooling	44 dB	49 dB
	Heating	49 dB	50 dB

COMPRESSOR AND REFRIGERANT

COMPRESSOR TYPE		Hermetic rotary type, 4 pole, 3 phase, DC brushless motor
DISCRIMINATION		808-884-80
WEIGHT (with oil)		9.3 kg
PRECHARGED REFRIGERANT		1,200 g
REFRIGERANT TYPE		R410A
FULL CHARGE	Piping length 15 m	1,200 g
	20 m	1,300 g
ADDITIONAL CHARGE		20 g/m
MAXIMUM PIPING HEIGHT DIFFERENCE		15 m

DIMENSIONS

INDOOR UNIT	H x W x D	245 x 570 x 570 mm
DECORATION PANEL	H x W x D	49 x 700 x 700 mm
OUTDOOR UNIT	H x W x D	620 x 790 x 290 mm

WEIGHT

INDOOR UNIT	Net / Shipping	15 kg / 18 kg
DECORATION PANEL	Net / Shipping	2.6 kg / 4.5 kg
OUTDOOR UNIT	Net / Shipping	39 kg / 42 kg

DIMENSIONS

INDOOR UNIT

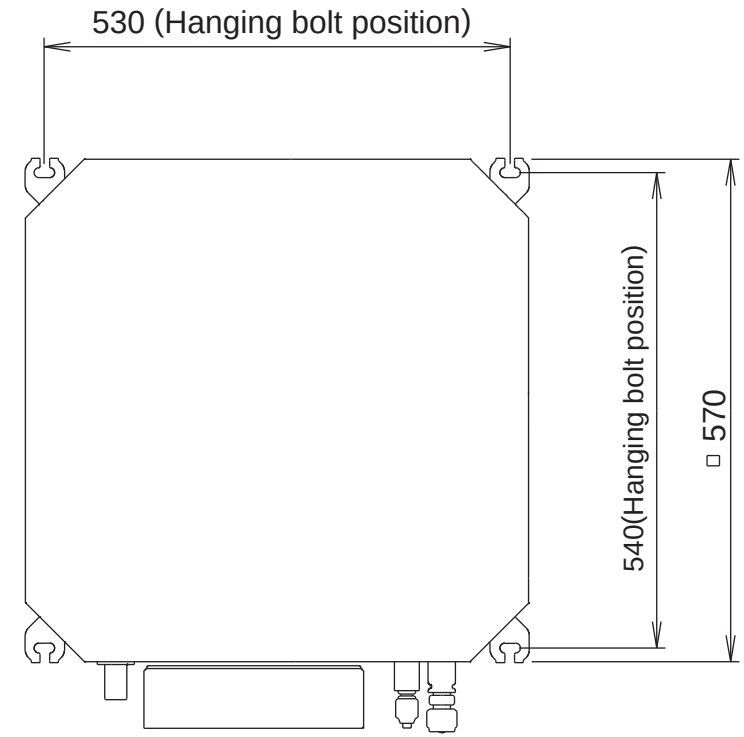

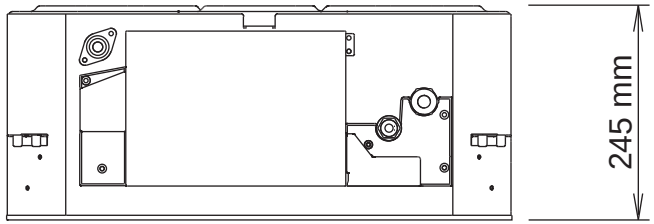

DECORATION PANEL
UTG-UFYD-W

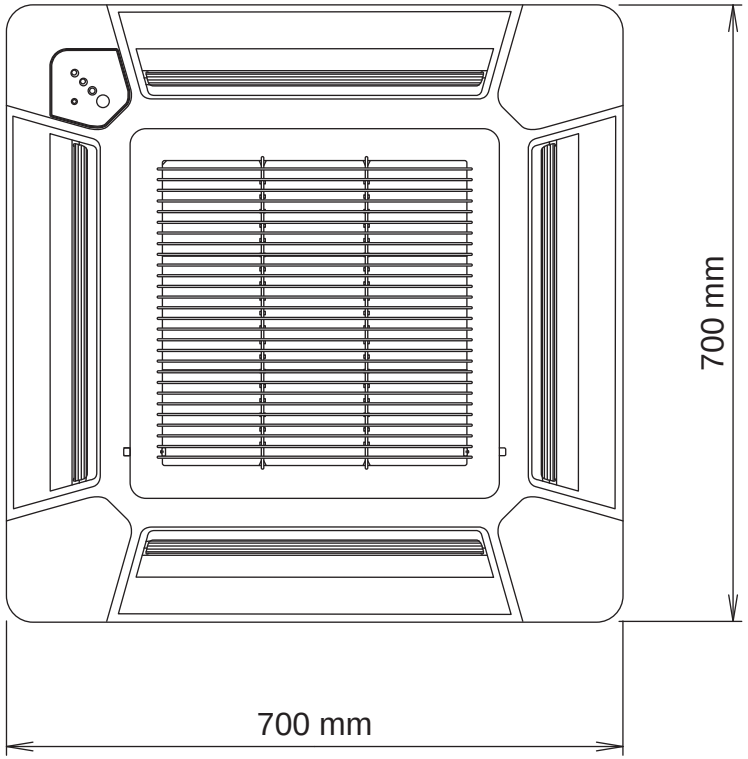

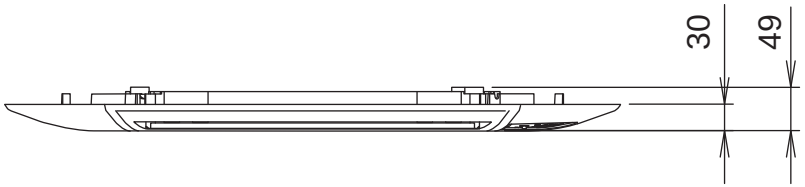

OUTDOOR UNIT

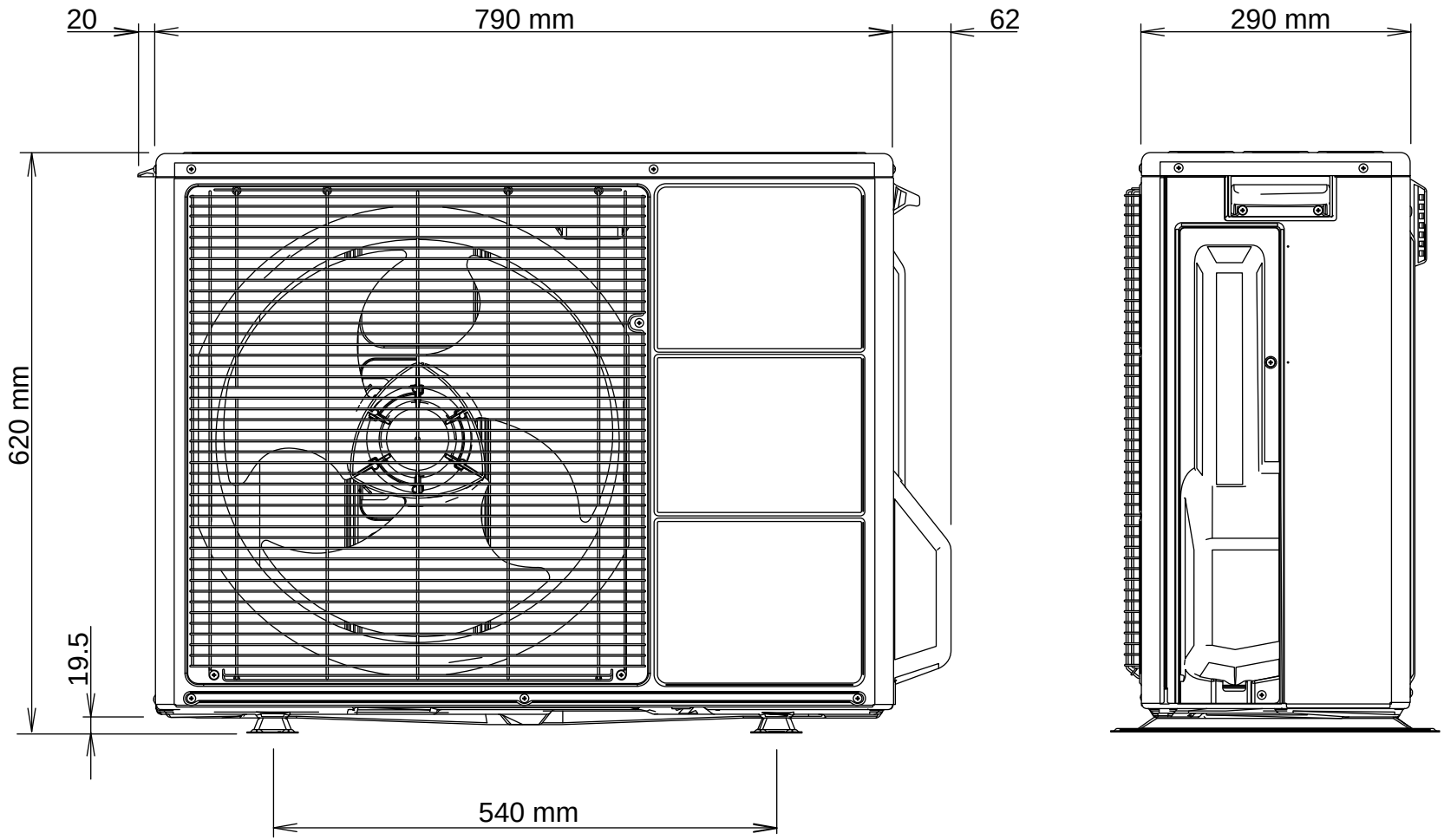

REFRIGERANT SYSTEM DIAGRAM

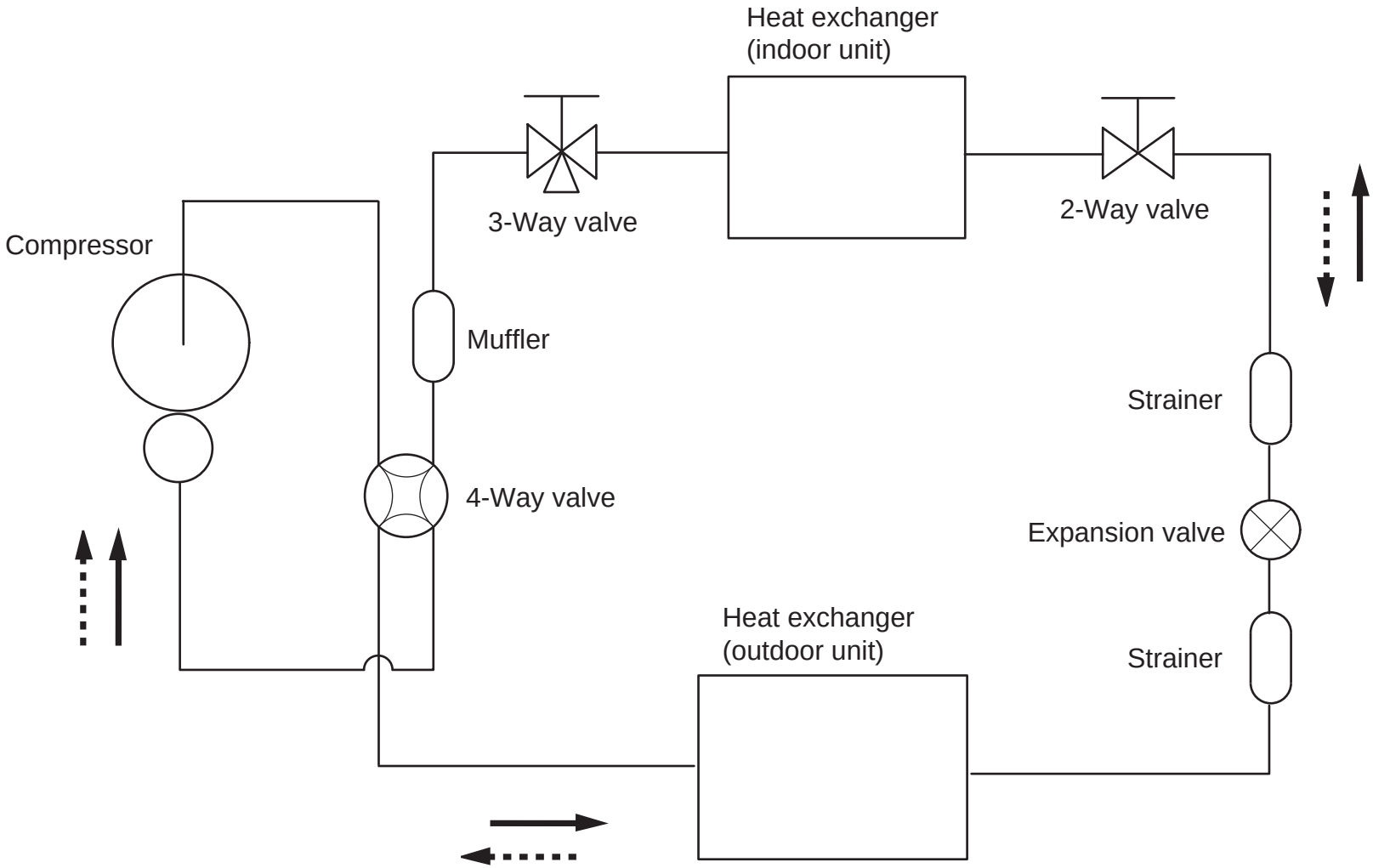

Refrigerant pipe diameter
Liquid : 1/4" (6.35 mm)
Gas : 3/8" (9.52 mm)

Refrigerant direction
Cooling
Heating

CIRCUIT DIAGRAM

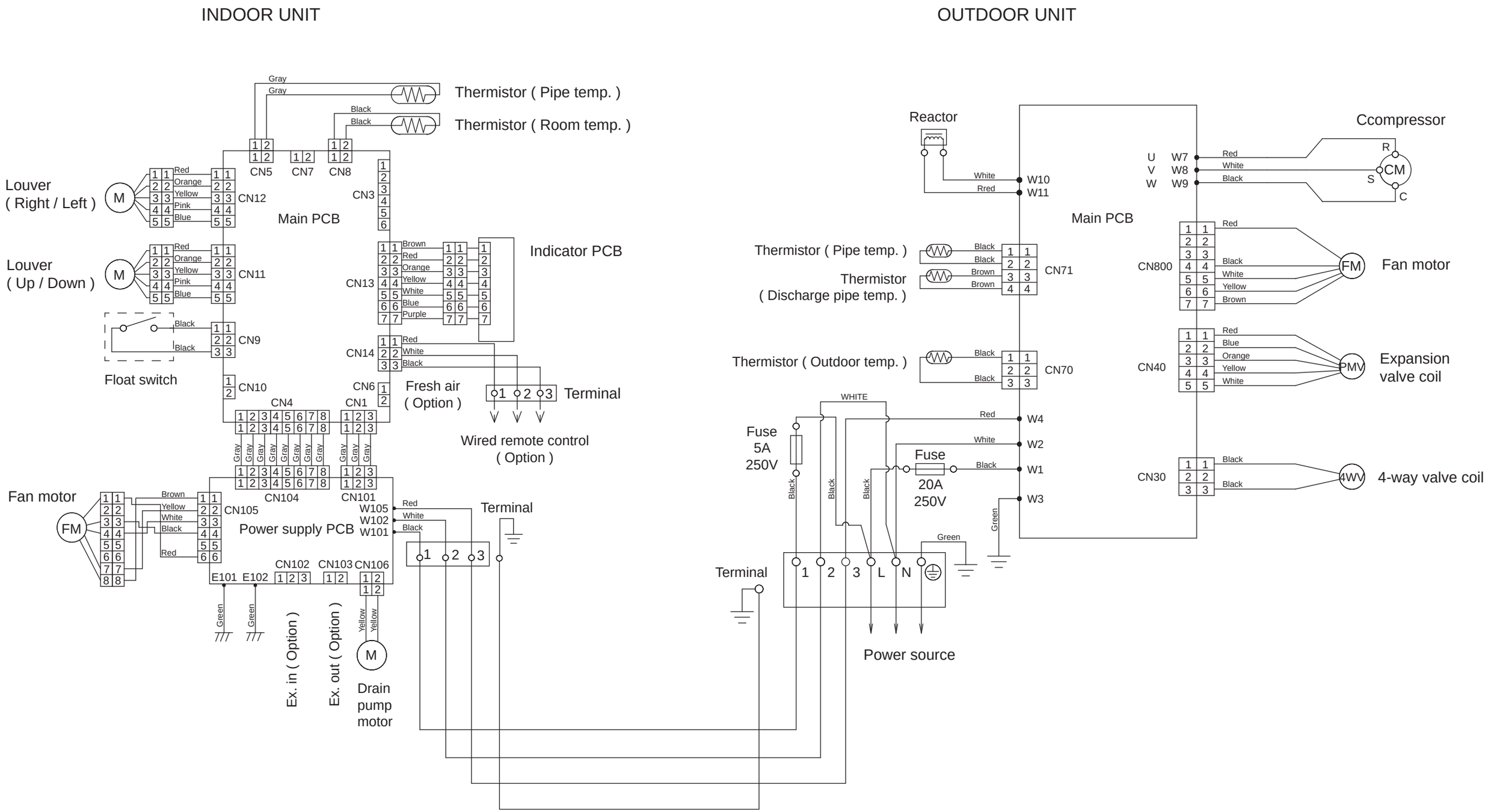

PCB CIRCUIT DIAGRAM

INDOOR UNIT

CN8
Thermistor Characteristics.

Thermistor \ Temperature	(0℃)	(20℃)	(30℃)
Thermistor (Room temp.)	33.6 k Ω 1.1 V	12.5 k Ω 2.2 V	8.0 k Ω 2.8 V

CN5
Thermistor Characteristics.

Thermistor \ Temperature	(0℃)	(20℃)	(30℃)
Thermistor (Pipe temp.)	168.6 k Ω 1.1 V	62.5 k Ω 2.2 V	40.0 k Ω 2.8 V

CONTROL UNIT
AUTG09LVLB : EZ-01518HSE
AUTG12LVLB : EZ-01519HSE

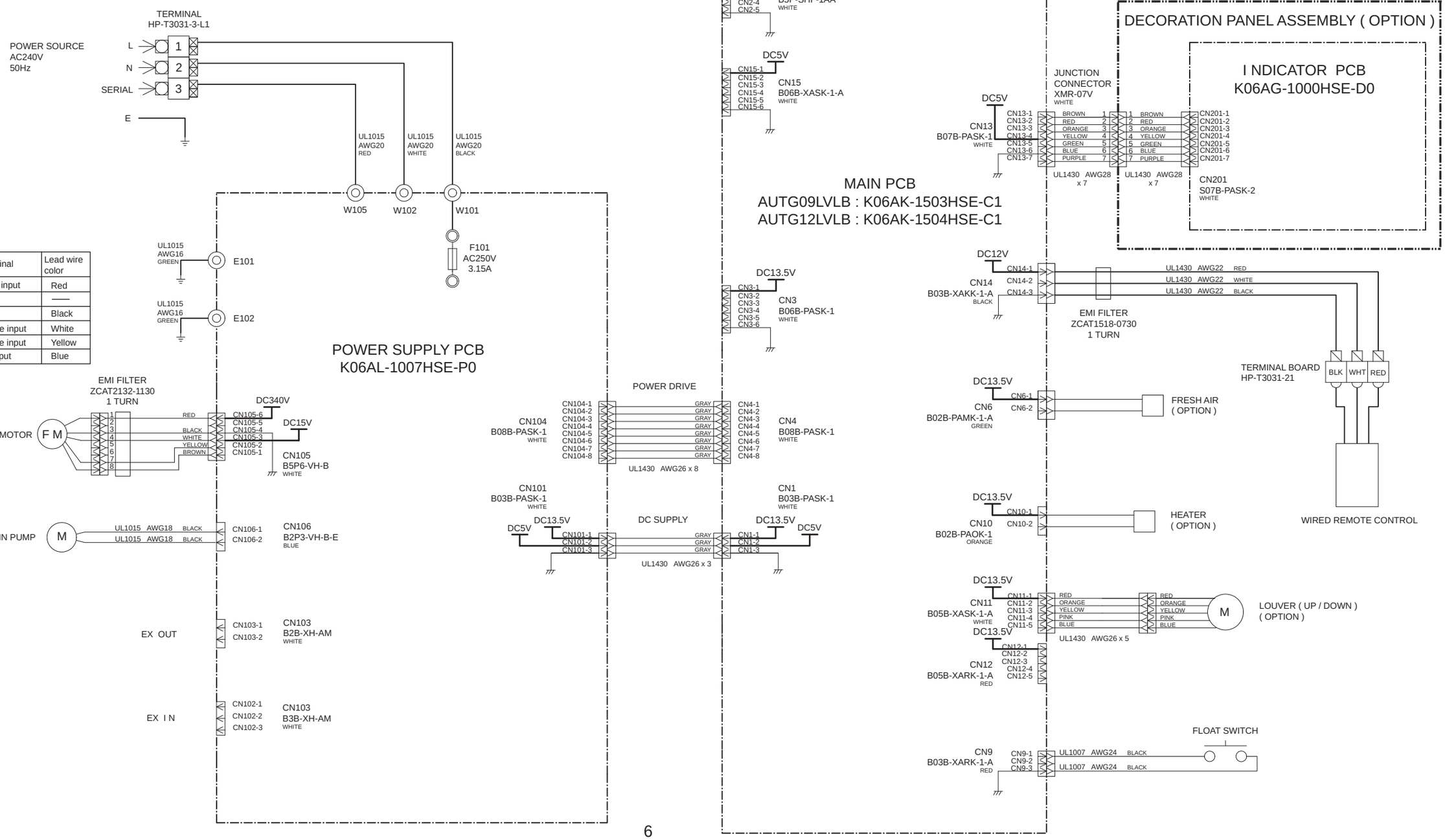

CN105 DC Fan motor

Pin No.	Terminal code	Function of terminal	Lead wire color
6	Vm	Motor power voltage input	Red
5	——	——	——
4	GND	GND	Black
3	Vcc	Control power voltage input	White
2	Vsp	Speed control voltage input	Yellow
1	PG	Revolution pulse output	Blue

OUTDOOR UNIT

INVERTER ASSEMBLY
AOTG09LBCB : EZ-0150MHUE
AOTG12LBCB : EZ-0150PHUE

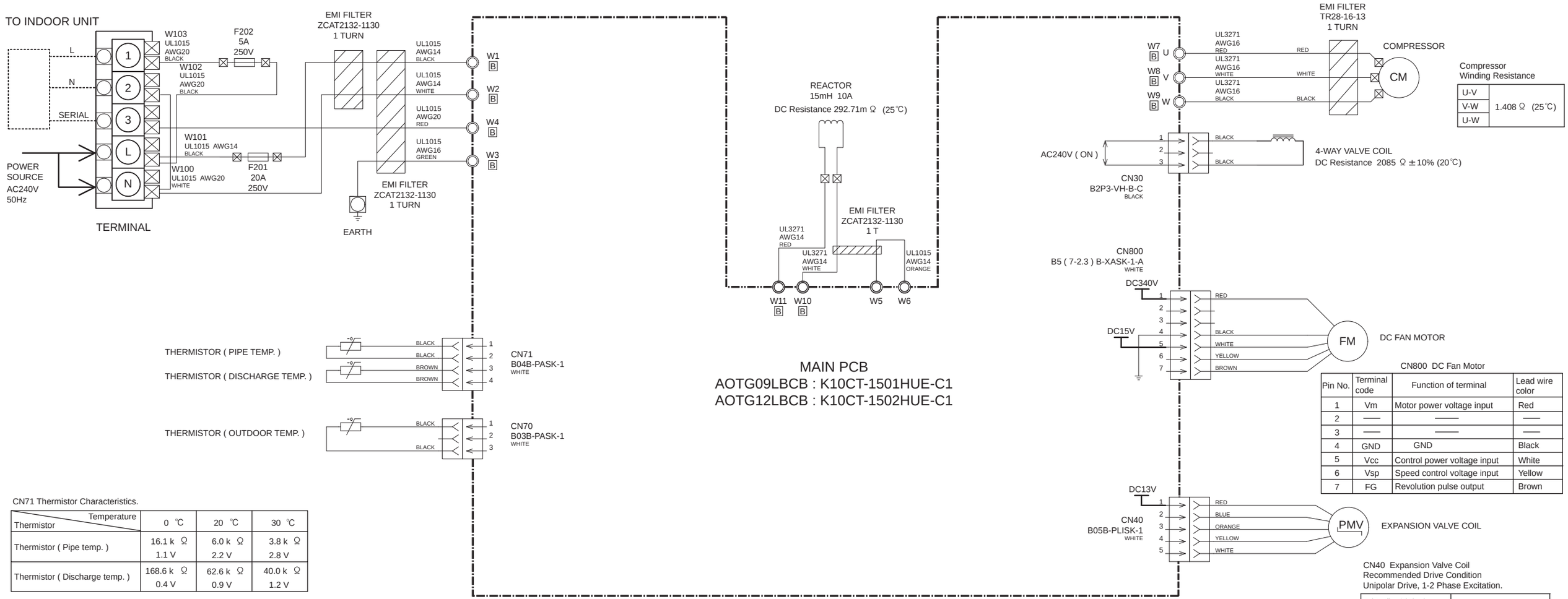

CN800 DC Fan Motor

Pin No.	Terminal code	Function of terminal	Lead wire color
1	Vm	Motor power voltage input	Red
2	——	——	——
3	——	——	——
4	GND	GND	Black
5	Vcc	Control power voltage input	White
6	Vsp	Speed control voltage input	Yellow
7	FG	Revolution pulse output	Brown

CN40 Expansion Valve Coil
Recommended Drive Condition
Unipolar Drive, 1-2 Phase Excitation.

1(Red) - 2(Blue)	Coil resistance ≒46.0Ω (20℃)
1(Red) - 3(Orange)	
1(Red) - 4(Yellow)	
1(Red) - 5(White)	

CN71 Thermistor Characteristics.

Thermistor \ Temperature	0 ℃	20 ℃	30 ℃
Thermistor (Pipe temp.)	16.1 k Ω 1.1 V	6.0 k Ω 2.2 V	3.8 k Ω 2.8 V
Thermistor (Discharge temp.)	168.6 k Ω 0.4 V	62.6 k Ω 0.9 V	40.0 k Ω 1.2 V

CN70 Thermistor Characteristics.

Thermistor \ Temperature	0 ℃	20 ℃	30 ℃
Thermistor (Outdoor temp.)	35.2 k Ω 2.6 V	12.6 k Ω 3.8 V	8.0 k Ω 4.1 V

ERROR DETECTION

INDOOR UNIT and WIRED REMOTE CONTROL

If you use a wireless remote control, the lamp on the photo detector unit will output error codes by way of blinking patterns.
If you use a wired type remote control, error codes will appear on the remote control display. See the lamp blinking patterns and error codes in the table. An error display is displayed only during running.

Remote control

This is possible only on a wired remote control.
If an error occurs, the following display will be shown.
(“Er” will appear in the set room temperature display.)

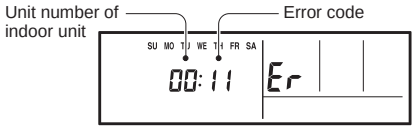

EX. Self-diagnosis

Indoor unit display (option)

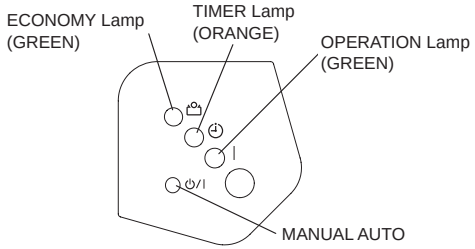

● : 0.5s on / 0.5s off

◇ : 0.1s on / 0.1s off

( ) : Number of flashing

Indoor unit			Wired remote control	Description
OPERATION lamp (green)	TIMER lamp (orange)	ECONOMY lamp (green)		
●(1)	●(1)	◇	11	Serial communication error
●(1)	●(2)	◇	12	Wired remote control communication error
●(1)	●(5)	◇	15	Check run unfinished
●(2)	●(1)	◇	21	Unit number or Refrigerant circuit address setting error [Simultaneous Multi]
●(2)	●(2)	◇	22	Indoor unit capacity error
●(2)	●(3)	◇	23	Combination error
●(2)	●(4)	◇	24	• Connection unit number error (indoor slave unit) [Simultaneous Multi] • Connection unit number error (indoor unit or branch unit) [Flexible Multi]
●(2)	●(7)	◇	27	Master unit, slave unit set-up error [Simultaneous Multi]
●(3)	●(2)	◇	32	Indoor unit PCB model information error
●(3)	●(5)	◇	35	Manual auto switch error
●(4)	●(1)	◇	41	Inlet air temp. sensor error
●(4)	●(2)	◇	42	Indoor unit Heat Ex. Middle temp. sensor error
●(5)	●(1)	◇	51	Indoor unit fan motor error
●(5)	●(3)	◇	53	Drain pump error
●(5)	●(7)	◇	57	Damper error
●(5)	●(15)	◇	5U	Indoor unit error
●(6)	●(2)	◇	62	Outdoor unit main PCB model information error or communication error
●(6)	●(3)	◇	63	Inverter error
●(6)	●(4)	◇	64	Active filter error, PFC circuit error
●(6)	●(5)	◇	65	Trip terminal L error
●(6)	●(10)	◇	6A	Display PCB microcomputers communication error

Indoor unit			Wired remote control	Description
OPERATION lamp (green)	TIMER lamp (orange)	ECONOMY lamp (green)		
●(7)	●(1)	◇	71	Discharge temp. sensor error
●(7)	●(2)	◇	72	Compressor temp. sensor error
●(7)	●(3)	◇	73	Outdoor unit Heat Ex. liquid temp. sensor error
●(7)	●(4)	◇	74	Outdoor temp. sensor error
●(7)	●(5)	◇	75	Suction gas temp. sensor error
●(7)	●(6)	◇	76	• 2-way valve temp. sensor error • 3-way valve temp. sensor error
●(7)	●(7)	◇	77	Heat sink temp. sensor error
●(8)	●(2)	◇	82	• Sub-cool Heat Ex. gas inlet temp. sensor error • Sub-cool Heat Ex. gas outlet temp.sensor error
●(8)	●(3)	◇	83	Liquid pipe temp. sensor error
●(8)	●(4)	◇	84	Current sensor error
●(8)	●(6)	◇	86	• Discharge pressure sensor error • Suction pressure sensor error • High pressure switch error
●(9)	●(4)	◇	94	Trip detection
●(9)	●(5)	◇	95	Compressor rotor position detection error (permanent stop)
●(9)	●(7)	◇	97	Outdoor unit fan motor error
●(9)	●(9)	◇	99	4-way valve error
●(10)	●(1)	◇	A1	Discharge temp. error
●(10)	●(3)	◇	A3	Compressor temp. error
●(10)	●(4)	◇	A4	High pressure error
●(10)	●(5)	◇	A5	Low pressure error
●(13)	●(2)	◇	J2	Branch boxes error [Flexible Multi]

DECORATION PANEL
UTG-UFYD-W

INDOOR UNIT
AUTG09LVLB
AUTG12LVLB

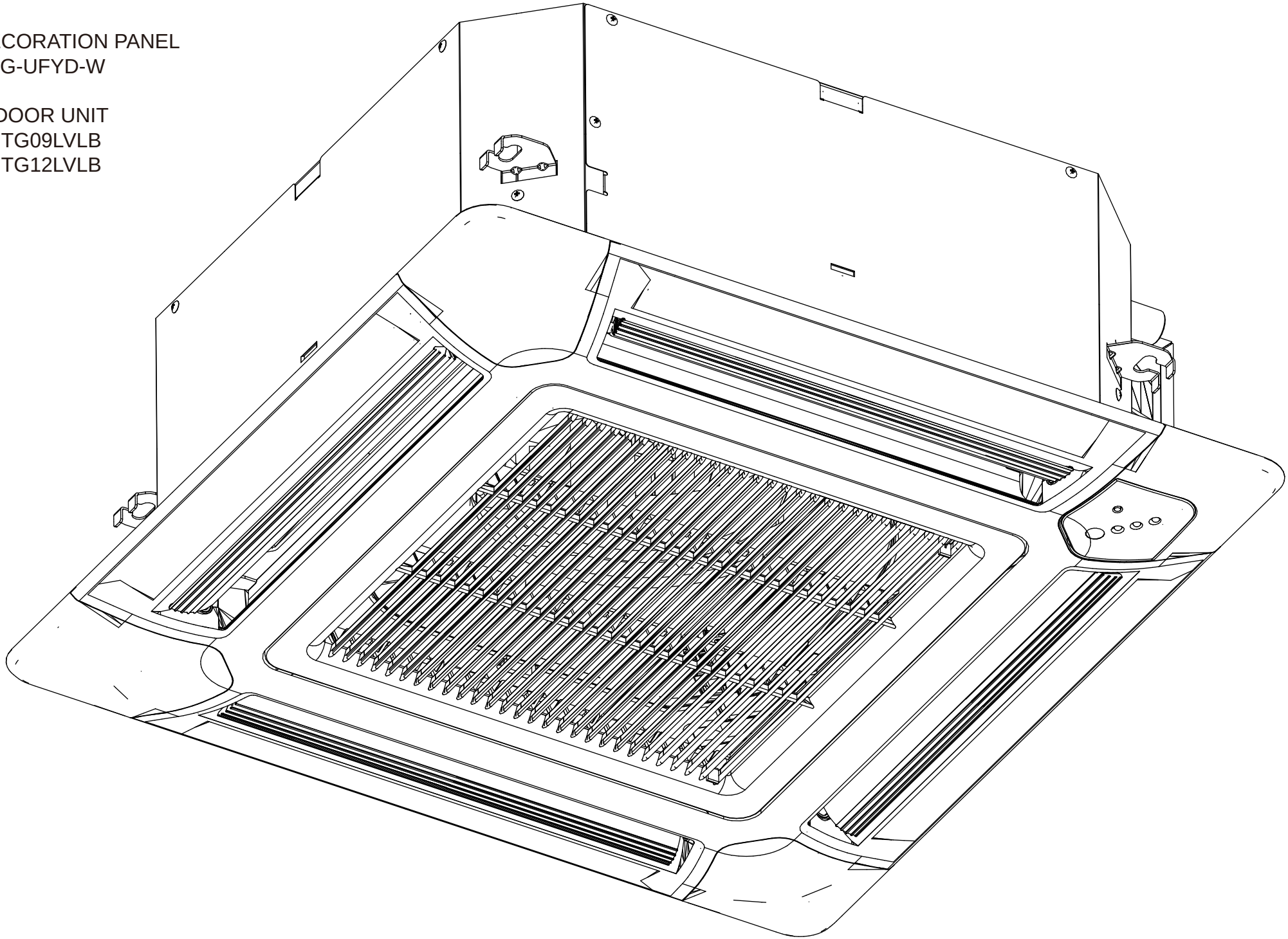

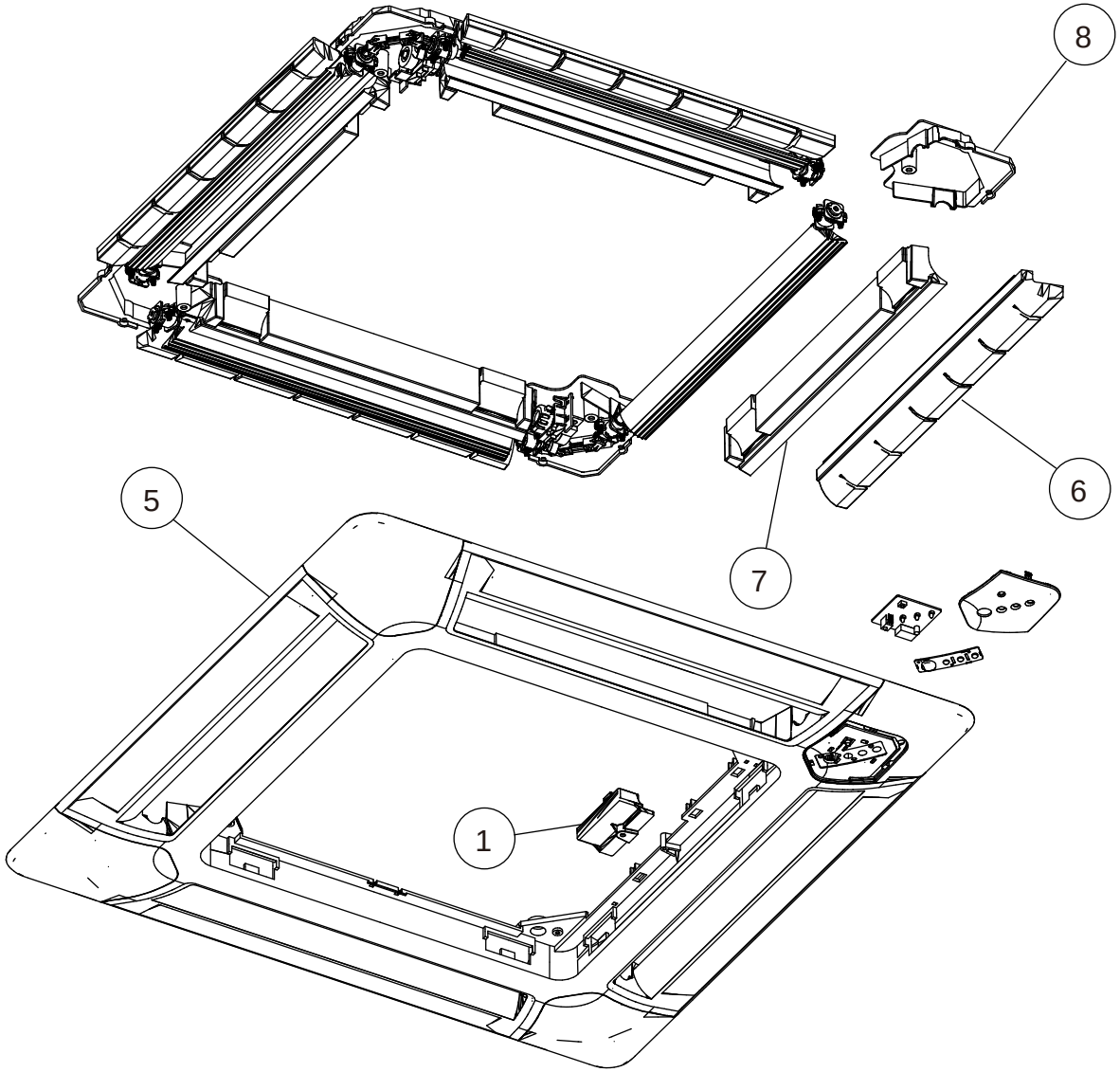

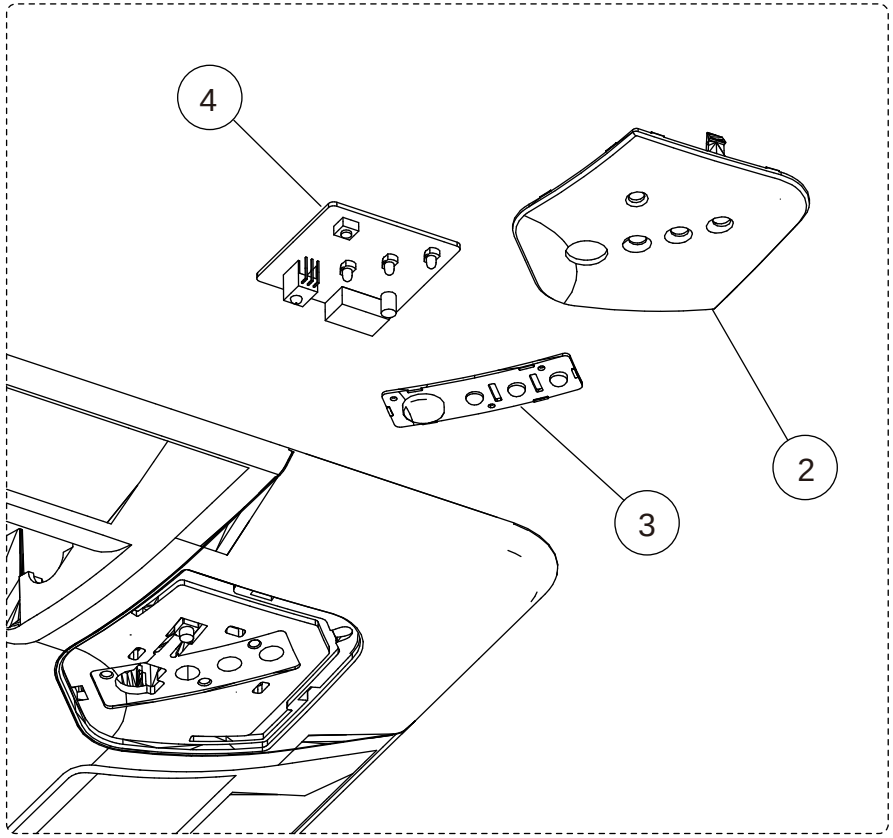

Intake Grille assy

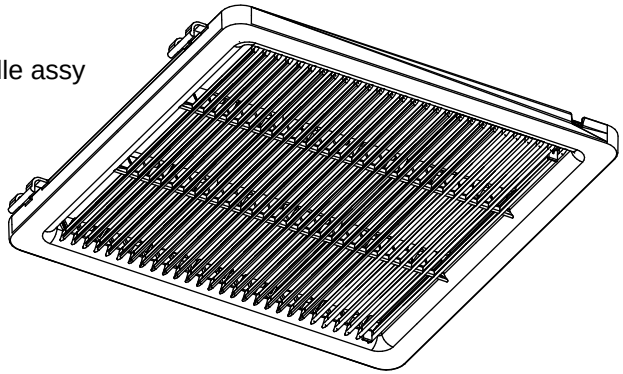

DECORATION PANEL
UTG-UFYD-W

Ref.	Description	Part number	
1	Connector Cover	9375549015	
2	Display Panel	9375529123	
3	Receiver Window	9375547011	
4	Indicator PCB	9707371031	
5	Decoration Panel	9375525040	
6	Panel Insulation A	9375526016	
7	Panel Insulation B	9375527013	
8	Panel Cover	9375530013	

DECORATION PANEL
UTG-UFYD-W
Intake grille assy

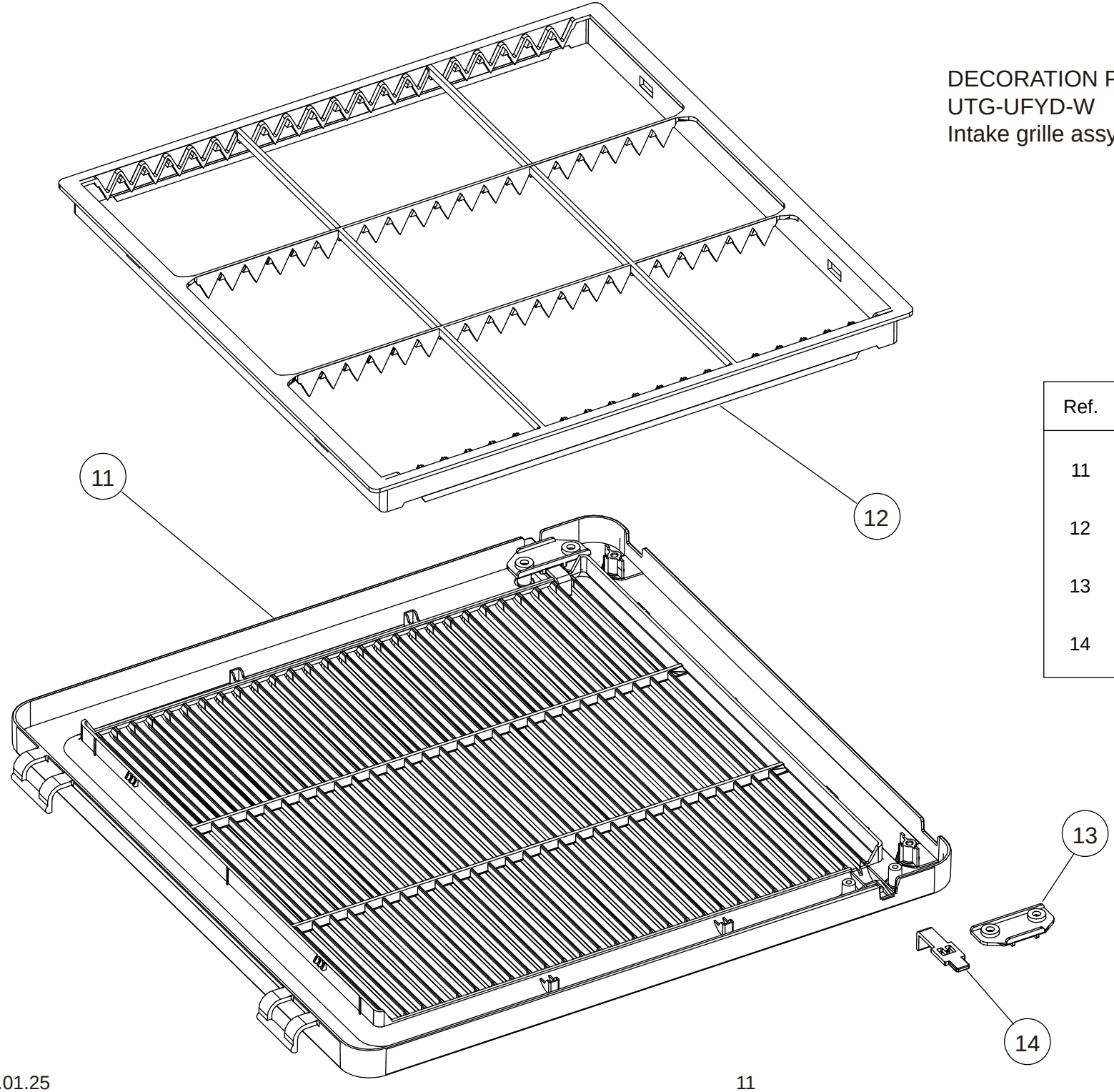

Ref.	Description	Part number	
11	Intake Grille	9375531027	
12	Long Life Filter	9375533014	
13	Hook Bracket	9375546014	
14	Grille Hook	9375532024	

DECORATION PANEL
UTG-UFYD-W

Flap total assy
Motor holder assy

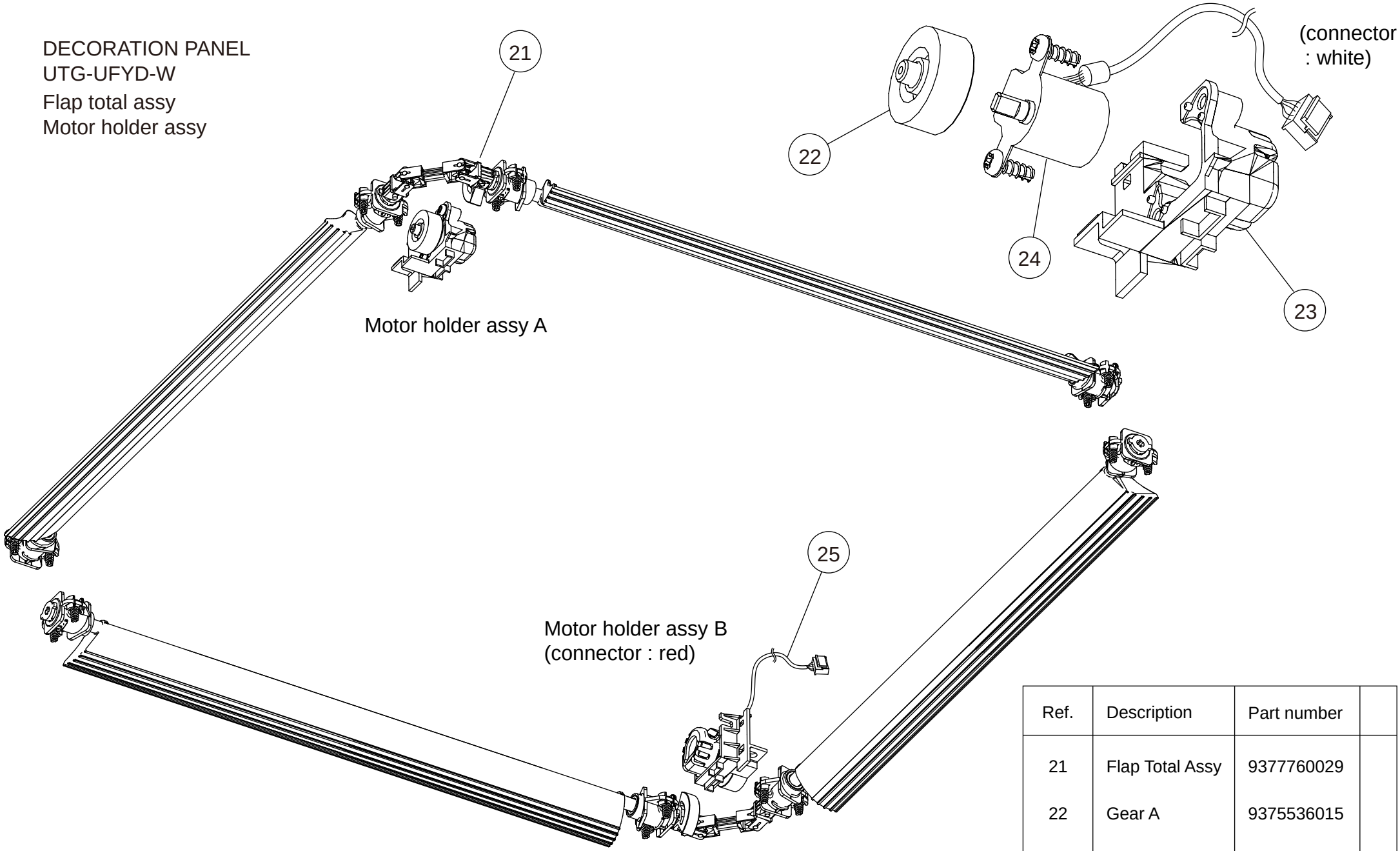

Ref.	Description	Part number	
21	Flap Total Assy	9377760029	
22	Gear A	9375536015	
23	Motor Holder	9375535018	
24	Step Motor	9900139070	
25	Step Motor	9900139087	

INDOOR UNIT
CASSETTE
AUTG09LVLB
AUTG12LVLB

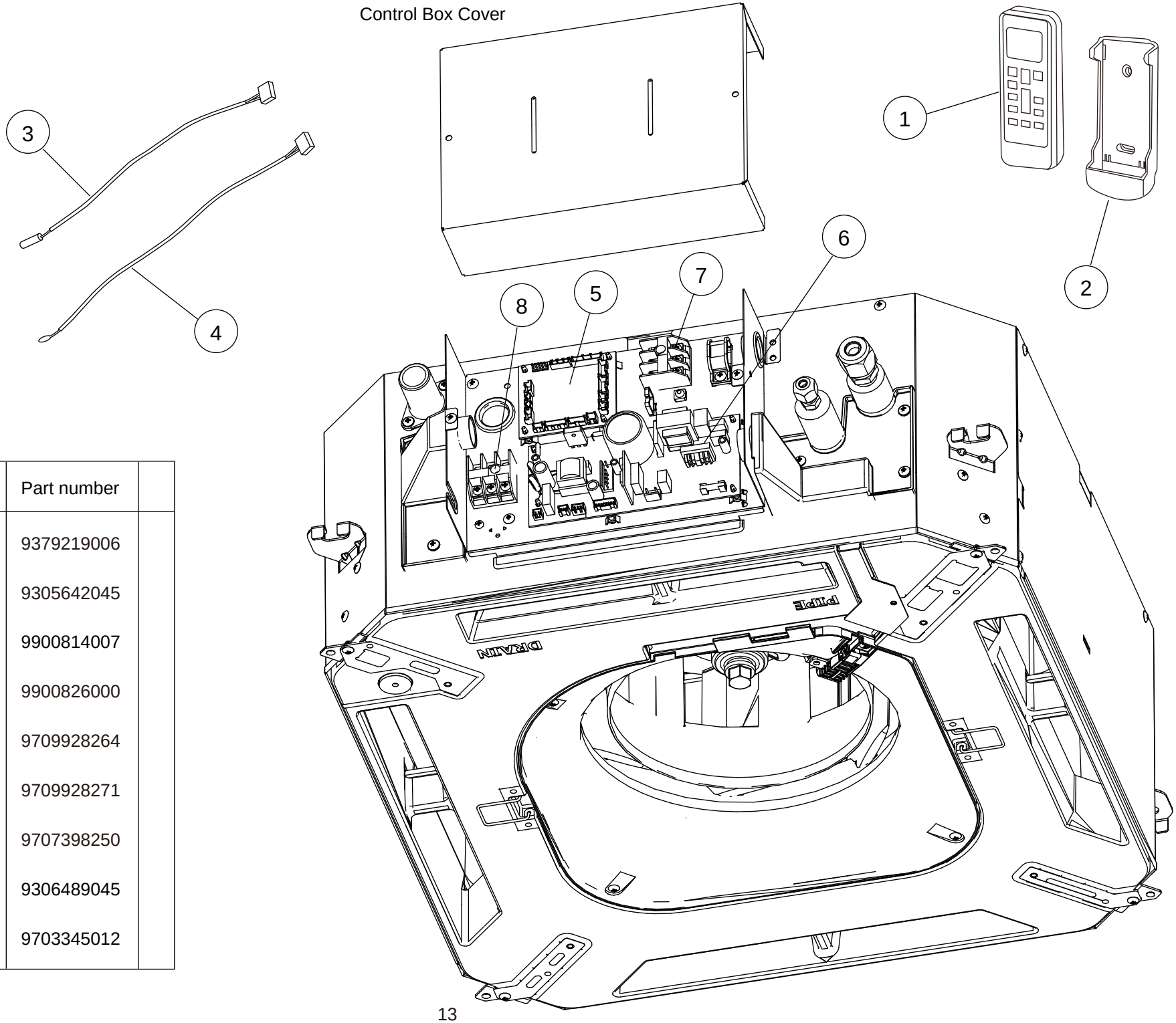

Ref.	Description	Part number	
1	Remote Control	9379219006	
2	Remote Control Holder	9305642045	
3	Pipe Thermistor	9900814007	
4	Room Thermistor	9900826000	
5	Main PCB (AUTG09LVLB)	9709928264	
5	Main PCB (AUTG12LVLB)	9709928271	
6	Power Supply PCB	9707398250	
7	Terminal	9306489045	
8	Terminal	9703345012	

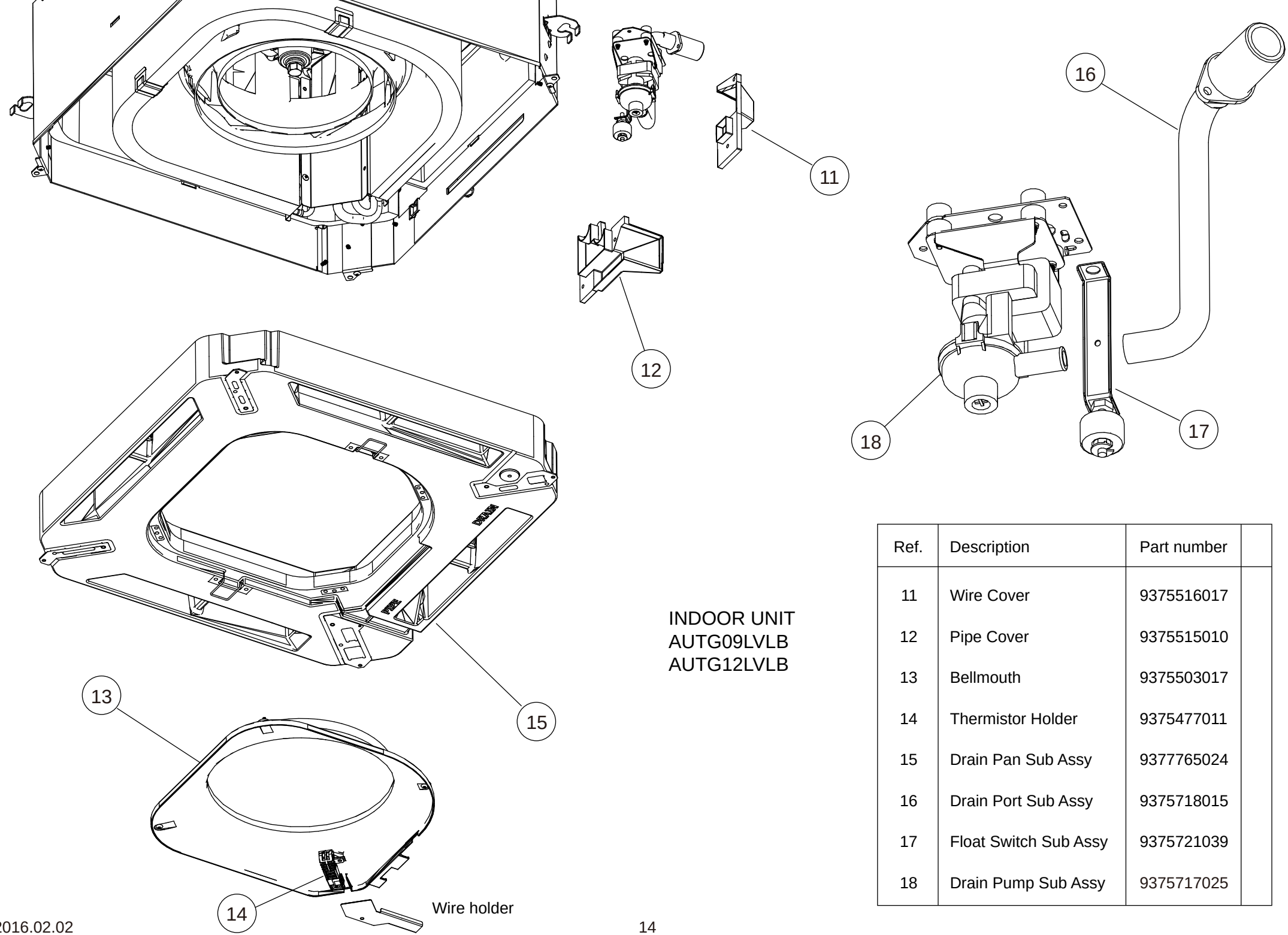

INDOOR UNIT
AUTG09LVLB
AUTG12LVLB

Ref.	Description	Part number	
11	Wire Cover	9375516017	
12	Pipe Cover	9375515010	
13	Bellmouth	9375503017	
14	Thermistor Holder	9375477011	
15	Drain Pan Sub Assy	9377765024	
16	Drain Port Sub Assy	9375718015	
17	Float Switch Sub Assy	9375721039	
18	Drain Pump Sub Assy	9375717025	

INDOOR UNIT
AUTG09LVLB
AUTG12LVLB

Ref.	Description	Part number	
21	Evaporator Total Assy	9377914033	
22	Insulation Box Sub Assy	9377764065	

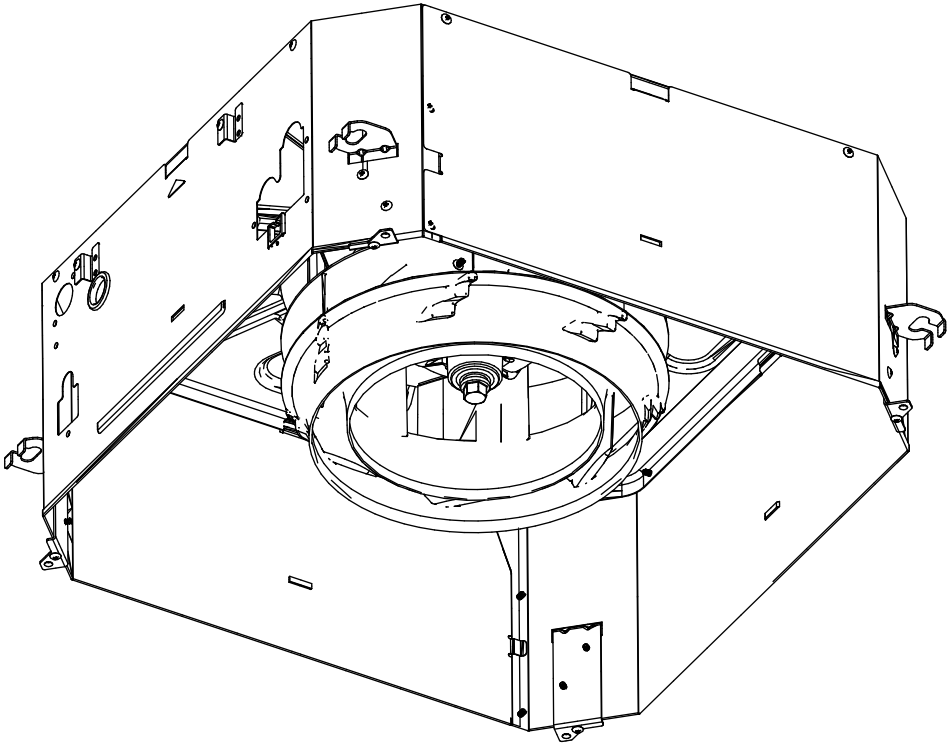

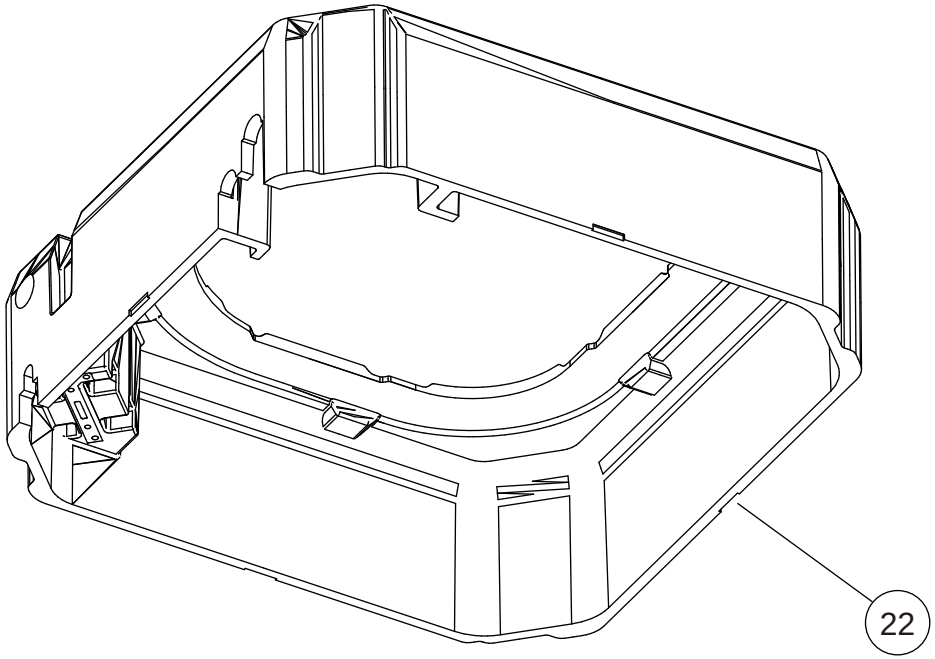

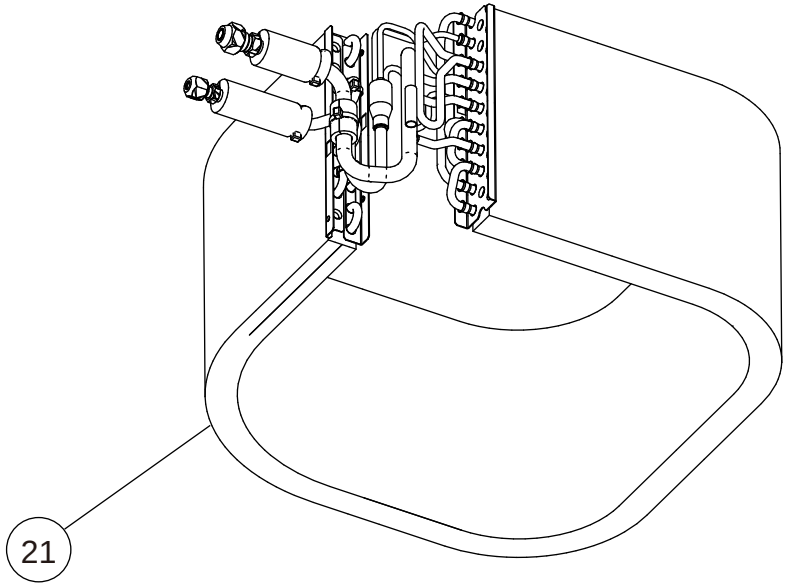

Separate wall

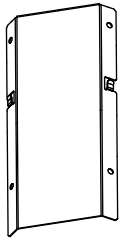

Evaporator holder 2 row

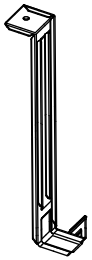

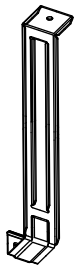

INDOOR UNIT
AUTG09LVLB
AUTG12LVLB

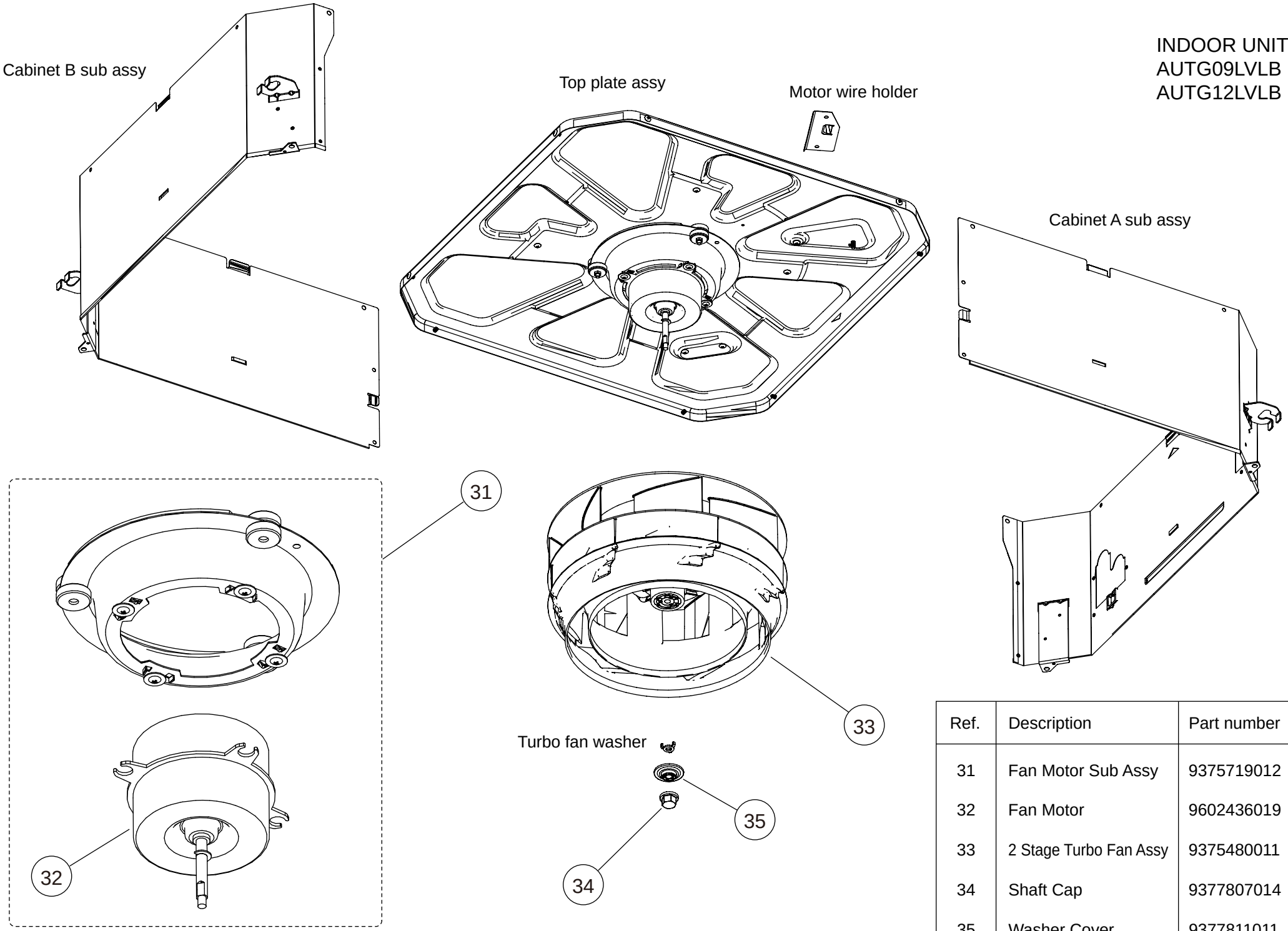

Ref.	Description	Part number	
31	Fan Motor Sub Assy	9375719012	
32	Fan Motor	9602436019	
33	2 Stage Turbo Fan Assy	9375480011	
34	Shaft Cap	9377807014	
35	Washer Cover	9377811011	

PARTS

OUTDOOR UNIT
AOTG09LBCB
AOTG12LBCB

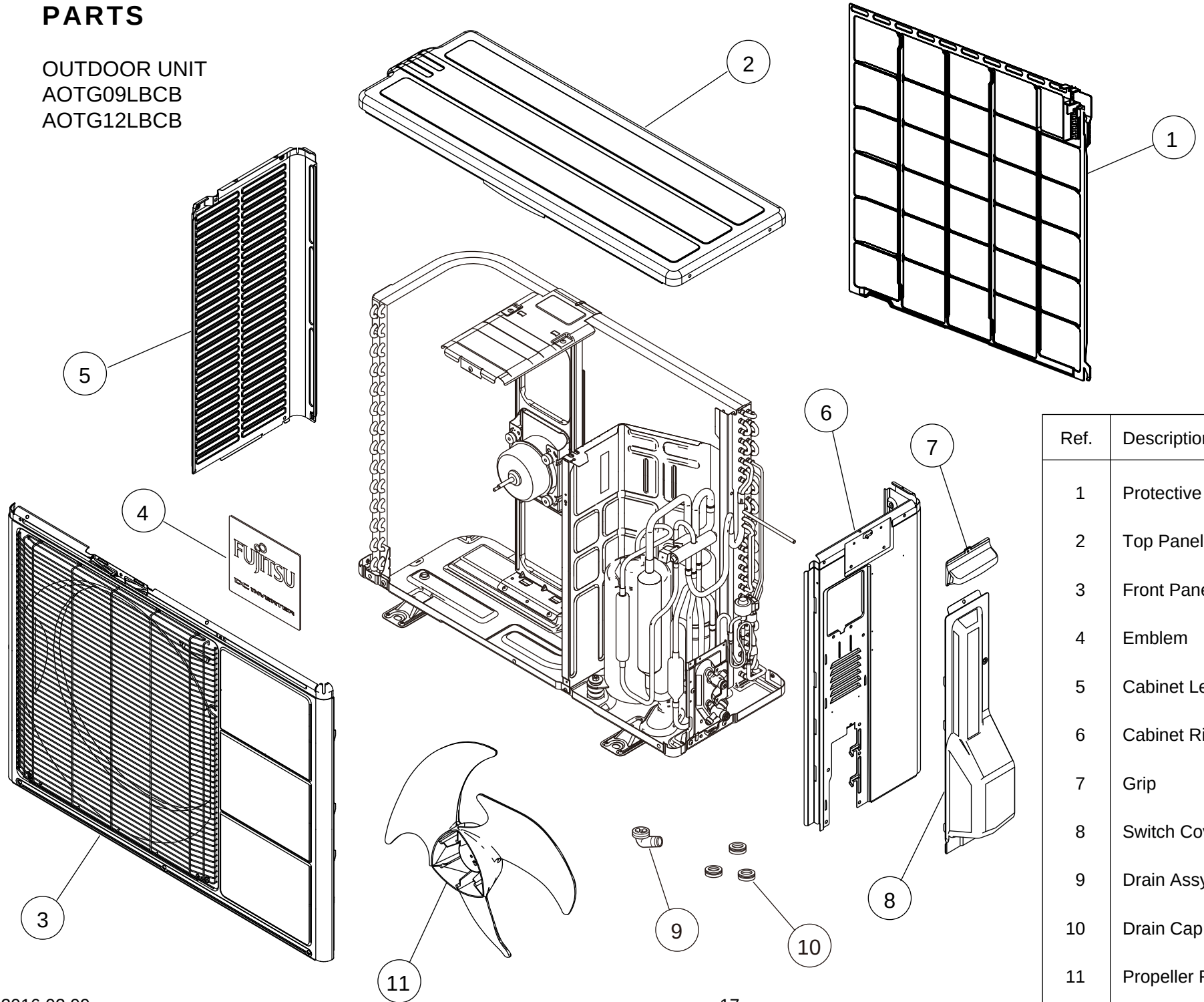

Ref.	Description	Part number	
1	Protective Net	9331640015	
2	Top Panel Assy	9318464023	
3	Front Panel Assy	9318463026	
4	Emblem	9319151007	
5	Cabinet Left Assy	9318461008	
6	Cabinet Right Assy	9318462012	
7	Grip	9317588003	
8	Switch Cover Assy	9318499001	
9	Drain Assy	9303029022	
10	Drain Cap	313166024302	
11	Propeller Fan	9313808013	

OUTDOOR UNIT
AOTG09LBCB
AOTG12LBCB

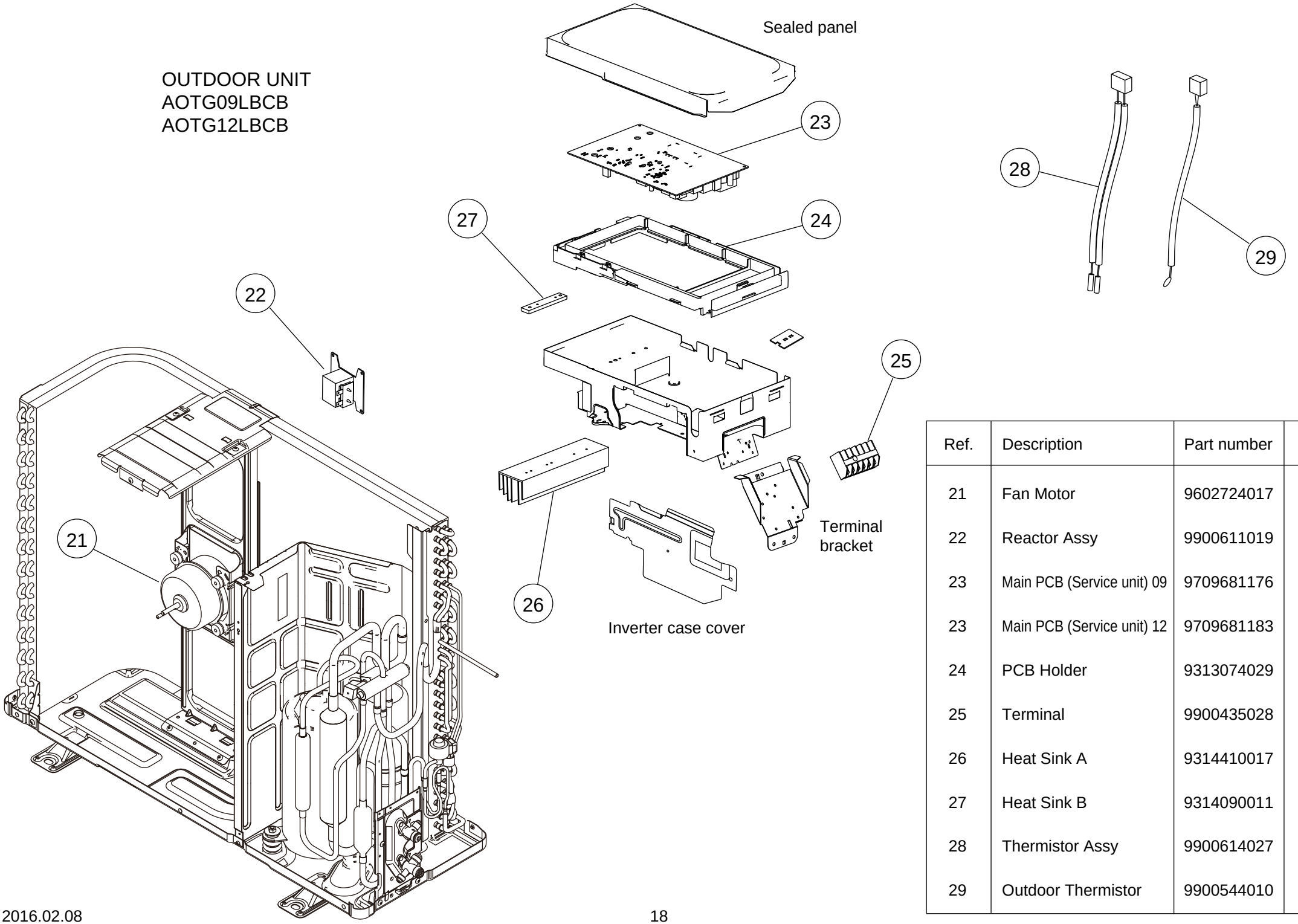

Ref.	Description	Part number	
21	Fan Motor	9602724017	
22	Reactor Assy	9900611019	
23	Main PCB (Service unit) 09	9709681176	
23	Main PCB (Service unit) 12	9709681183	
24	PCB Holder	9313074029	
25	Terminal	9900435028	
26	Heat Sink A	9314410017	
27	Heat Sink B	9314090011	
28	Thermistor Assy	9900614027	
29	Outdoor Thermistor	9900544010	

OUTDOOR UNIT
AOTG09LBCB
AOTG12LBCB

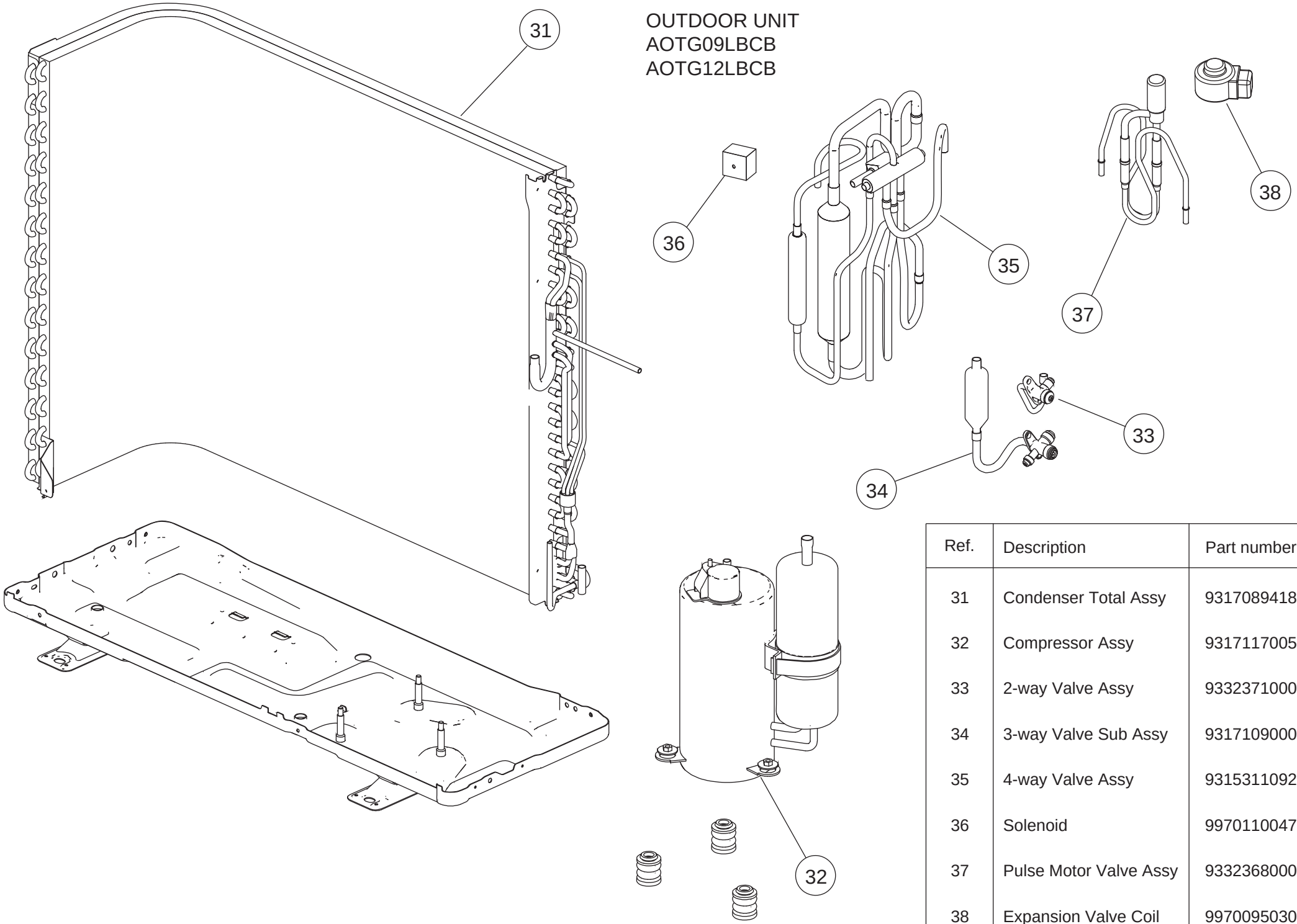

Ref.	Description	Part number	
31	Condenser Total Assy	9317089418	
32	Compressor Assy	9317117005	
33	2-way Valve Assy	9332371000	
34	3-way Valve Sub Assy	9317109000	
35	4-way Valve Assy	9315311092	
36	Solenoid	9970110047	
37	Pulse Motor Valve Assy	9332368000	
38	Expansion Valve Coil	9970095030	

ACCESSORIES

INDOOR UNIT CASSETTE AUTG09LVLB AUTG12LVLB

Name and Shape	Q'ty
Coupler heat insulation (Large) For indoor side pipe joint (gas pipe)	1
Coupler heat insulation (Small) For indoor side pipe joint (liquid pipe)	1
Special nut A (Large flange) For installing indoor unit	4
Special nut B (Small flange) For installing indoor unit	4
Template (Carton top) For cealing openings cutting Also used as packing	1
Drain hose For installing drain pipe	1
Hose Band For installing drain hose	1

Name and Shape	Q'ty
Drain hose insulation For installing drain pipe	1
Remote control	1
Battery	2
Remote control holder	1
Tapping screw (M3 × 12mm) Mounting the remote control holder	2
Cable tie For electrical wiring	2
Wire clamper For electrical wiring	1

DECORATION PANEL UTG-UFYD-W

Name and Shape	Q'ty
Connector cover For covering connector	1
Tapping Screw (M5 × 12 mm) Mounting decoration panel	4
Tapping Screw (M4 × 12 mm) Mounting connector cover	1
L angle Mounting the Hook Wire to the decoration panel	2
Hook wire Suspending the decoration panel	2
Screw [pitch small] (M4 × 10 mm) Mounting the Hook wire (for metals)	2
Screw [pitch large] (M4 × 10 mm) Mounting the L angle and Hook wire (for resins)	4

OUTDOOR UNIT
AOTG09LBCB
AOTG12LBCB

Parts name	Q'ty
Drain pipe 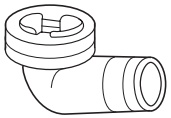	1
Drain cap	3

1602G4484