FUJITSU

SPLIT TYPE
ROOM AIR CONDITIONER
WALL MOUNTED TYPE

SERVICE MANUAL

Indoor unit	Outdoor unit
ASTG34JFCC	AOTG34JFTC
ASTG34LFCC	AOTG34LFTC

Refrigerant R410A

CONTENTS

SPECIFICATIONS 1
DIMENSIONS. 2
REFRIGERANT SYSTEM DIAGRAM . . . 3
CIRCUIT DIAGRAM. 4
INDOOR PCB CIRCUIT DIAGRAM. 5
OUTDOOR PCB CIRCUIT DIAGRAM . . . 8
ERROR DETECTION. 15
PARTS (INDOOR UNIT) 20
PARTS (OUTDOOR UNIT) 24
ACCESSORIES. 27

FUJITSU GENERAL LIMITED

SPECIFICATIONS

ELECTRICAL DATA

TYPE		Cool inverter	Cool and heat
INDOOR UNIT		ASTG34JFCC	ASTG34LFCC
OUTDOOR UNIT		AOTG34JFTC	AOTG34LFTC
COOLING CAPACITY		9.20 kW	9.20 kW
HEATING CAPACITY		-	10.00 kW
POWER SOURCE		240 V	240 V
FREQUENCY		50 Hz	50 Hz
RUNNING CURRENT	Cool	11.8 A	11.8 A
	Heat	-	12.8 A
INPUT WATTS	Cool	2.80 kW	2.80 kW
	Heat	-	3.03 kW
E.E.R.	Cool	3.29 kW/kW	3.29 kW/kW
COP	Heat, H1	-	3.30 kW/kW
COP	Heat, H2	-	2.87 kW/kW
MOISTURE REMOVAL		3.5 L/hr	3.5 L/hr
AIR CIRCULATION HIGH	Cool	1,250 m3/hr	1,250 m3/hr
	Heat	-	1,220 m3/hr
MAXIMUM CURRENT	Cool	18.5 A	18.5 A
	Heat	-	19.0 A

FAN MOTOR

POWER SOURCE		240 V	
INDOOR UNIT, Discrimination		MFD-71TXAN	
INDOOR UNIT Cool	High	1,650 r.p.m.	1,650 r.p.m.
	Medium	1,220 r.p.m.	1,220 r.p.m.
	Low	1,020 r.p.m.	1,020 r.p.m.
	Quiet	930 r.p.m.	930 r.p.m.
INDOOR UNIT Heat	High	-	1,620 r.p.m.
	Medium	-	1,220 r.p.m.
	Low	-	1,020 r.p.m.
	Quiet	-	900 r.p.m.
OUTDOOR UNIT, Discrimination		MFE-60TVT	
OUTDOOR UNIT Cool	Upper	780 r.p.m.	780 r.p.m.
	Lower	750 r.p.m.	750 r.p.m.
OUTDOOR UNIT Heat	Upper	-	720 r.p.m.
	Lower	-	700 r.p.m.

NOISE LEVEL

INDOOR UNIT	High	52 dB
	Medium	42 dB
	Low	37 dB
	Quiet	34 dB
OUTDOOR UNIT		53 dB

COMPRESSOR AND REFRIGERANT

TYPE		Hermetic type, 4 pole, DC inverter motor, Rotary
DISCRIMINATION		N-TF30HD1A
WEIGHT WITH OIL		15.4 kg
PRECHARGED REFRIGERANT		2,750 g
REFRIGERANT TYPE		R410A
FULL CHARGE	Pipe length 20 m	2,750 g
	Pipe length 50 m	3,950 g
ADDITIONAL REFRIGERANT		40 g/m
MAXIMUM PIPING HEIGHT		30 m

DIMENSIONS

INDOOR UNIT	H x W x D	320 x 998 x 238 mm
OUTDOOR UNIT	H x W x D	1,290 x 900 x 330 mm

WEIGHT

INDOOR UNIT	Shipping / Net	18 kg / 14 kg
OUTDOOR UNIT	Shipping / Net	93 kg / 86 kg

DIMENSIONS

Unit : mm

INDOOR UNIT

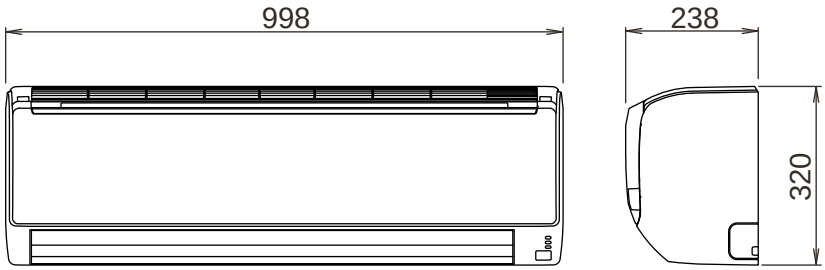

Drain hose length : 670 mm
Drain hose diameter
Inside : 12 mm
Outside : 16 mm

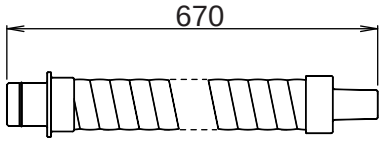

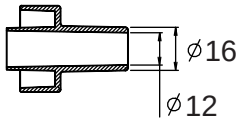

OUTDOOR UNIT

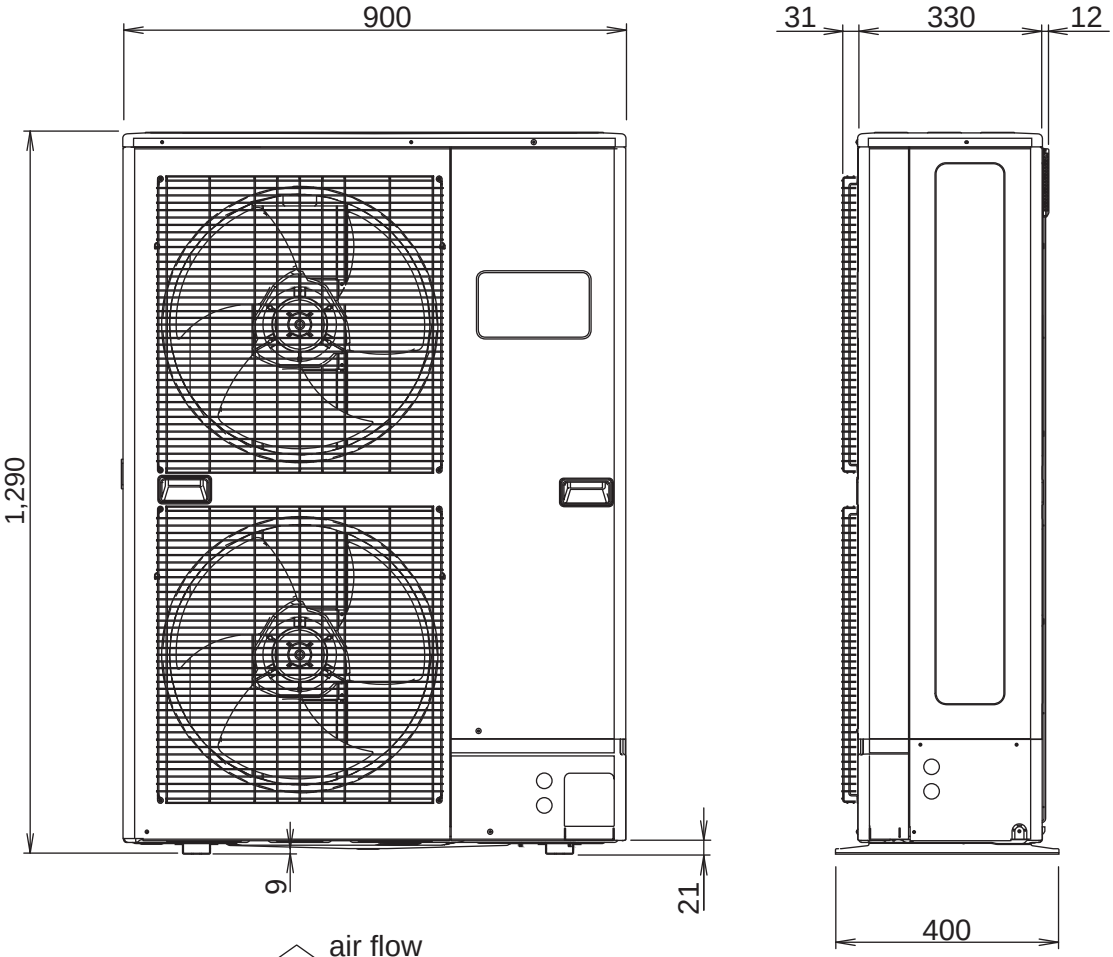

REFRIGERANT SYSTEM DIAGRAM

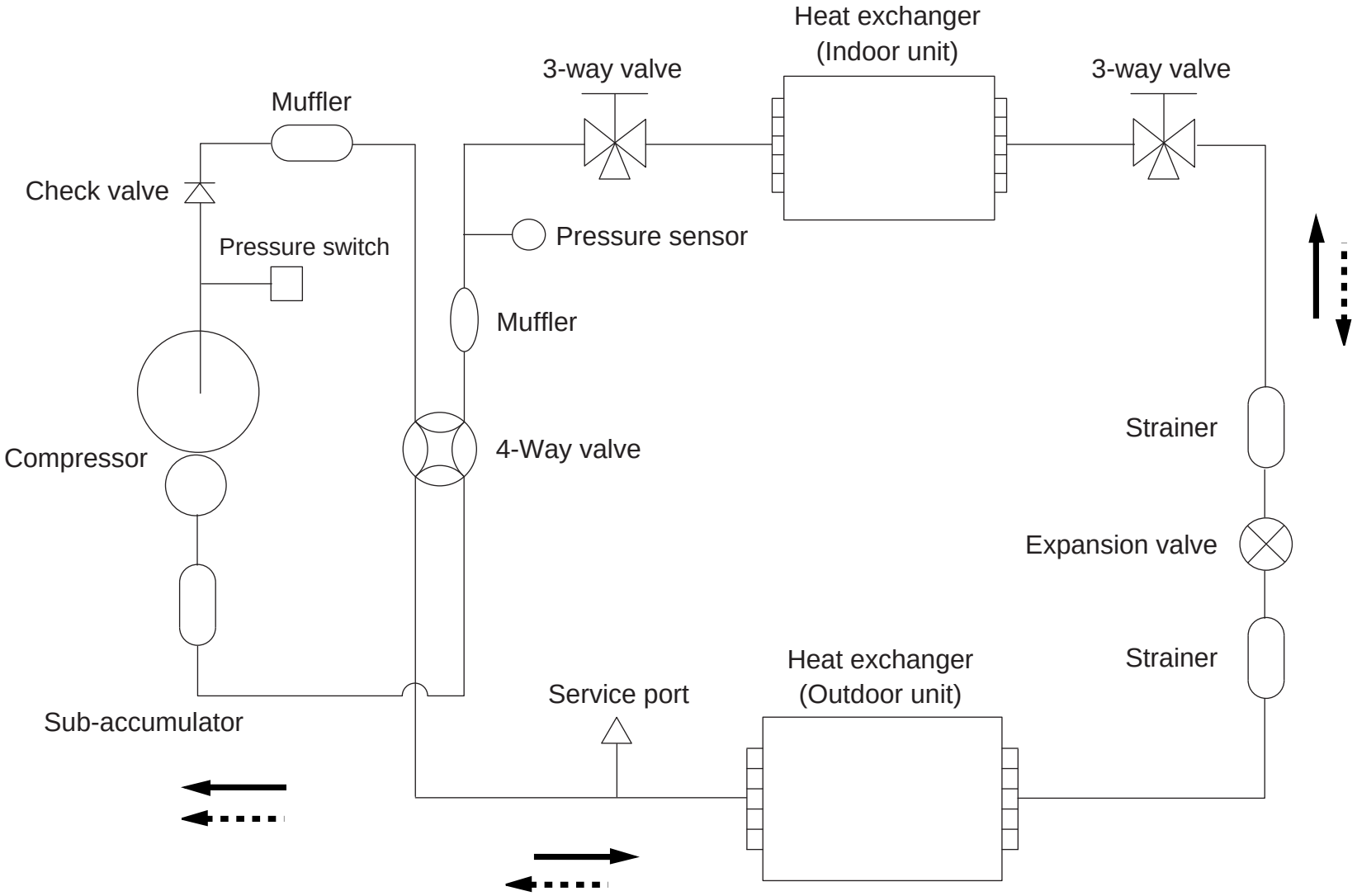

Cooling flow

Heating flow

Refrigerant pipe diameter
Liquid : 1/4" (6.35 mm)
Gas : 5/8" (15.88 mm)

CIRCUIT DIAGRAM

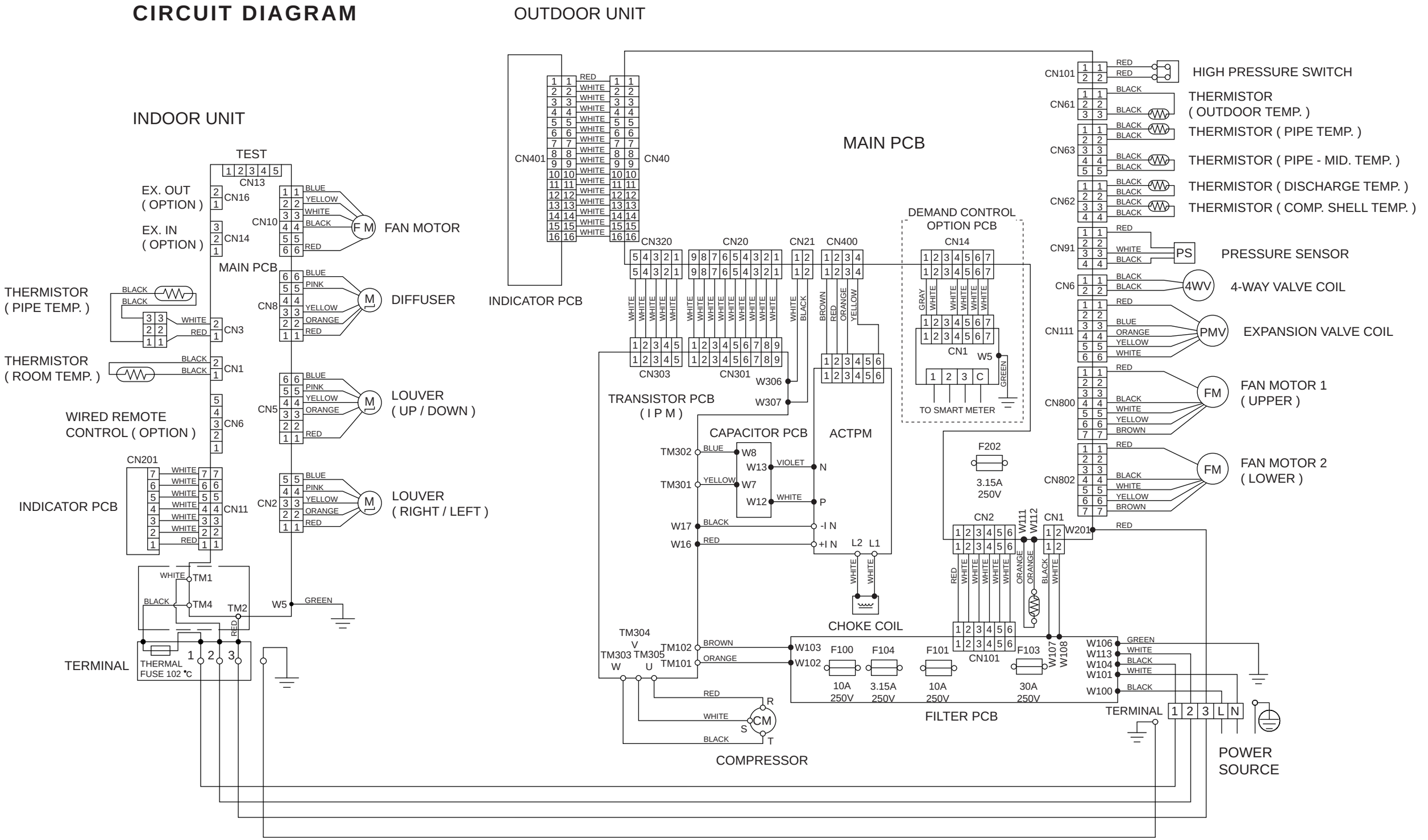

INDOOR PCB CIRCUIT DIAGRAM

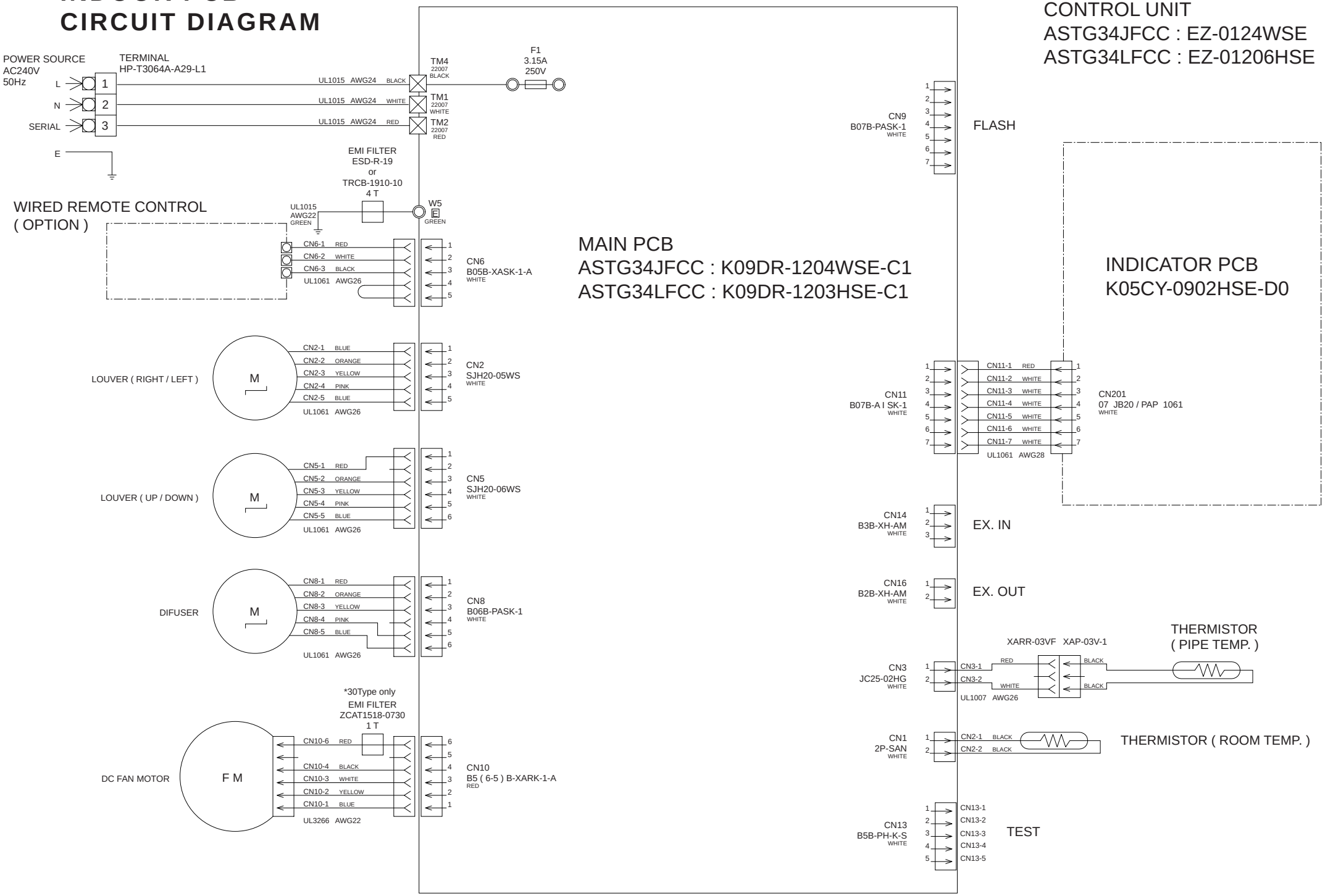

INDOOR UNIT
MAIN PCB
ASTG34JFCC : K09DR-1204WSE-C1
ASTG34LFCC : K09DR-1203HSE-C1

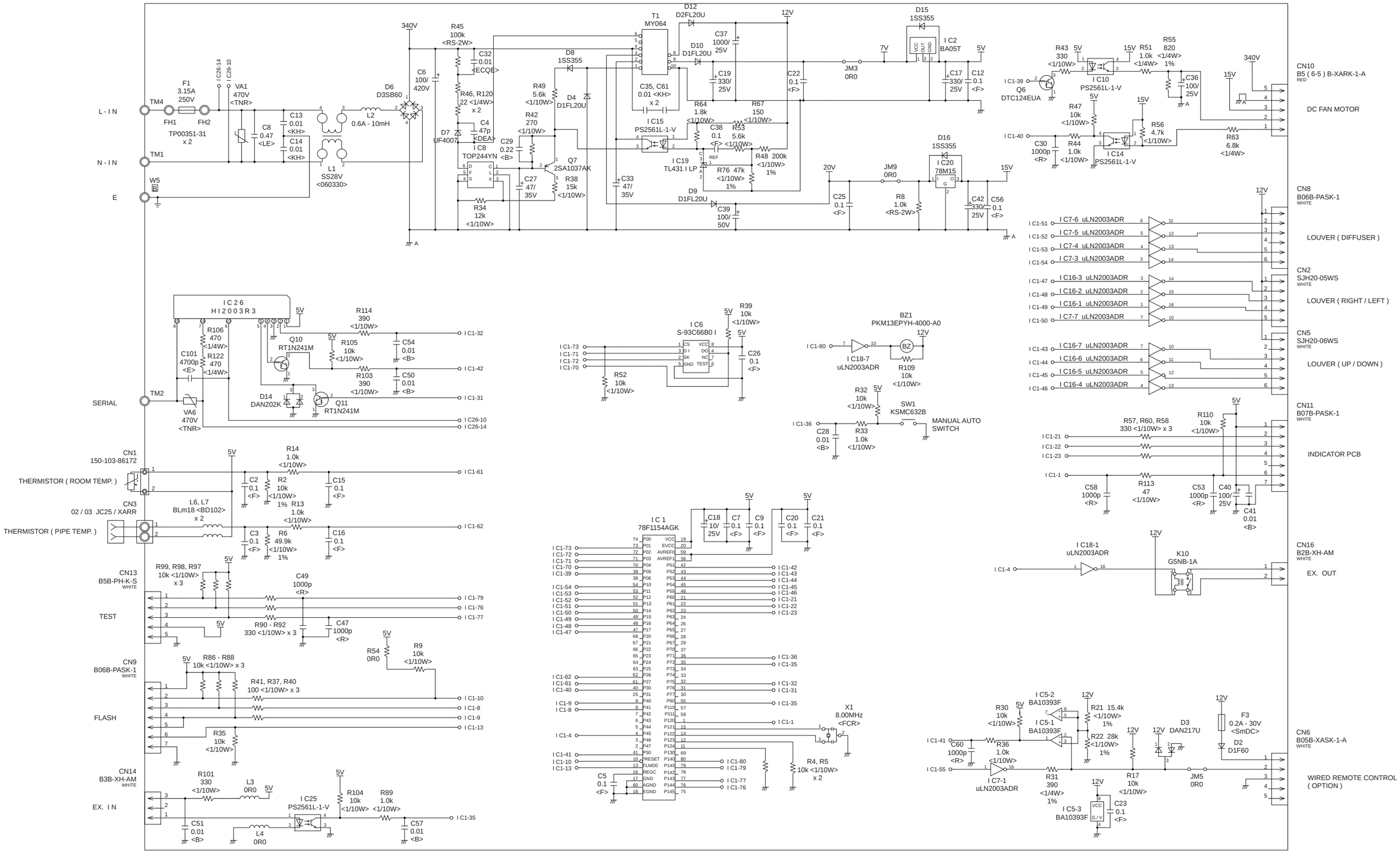

INDOOR UNIT
INDICATOR PCB
K05CY-0902HSE-D0

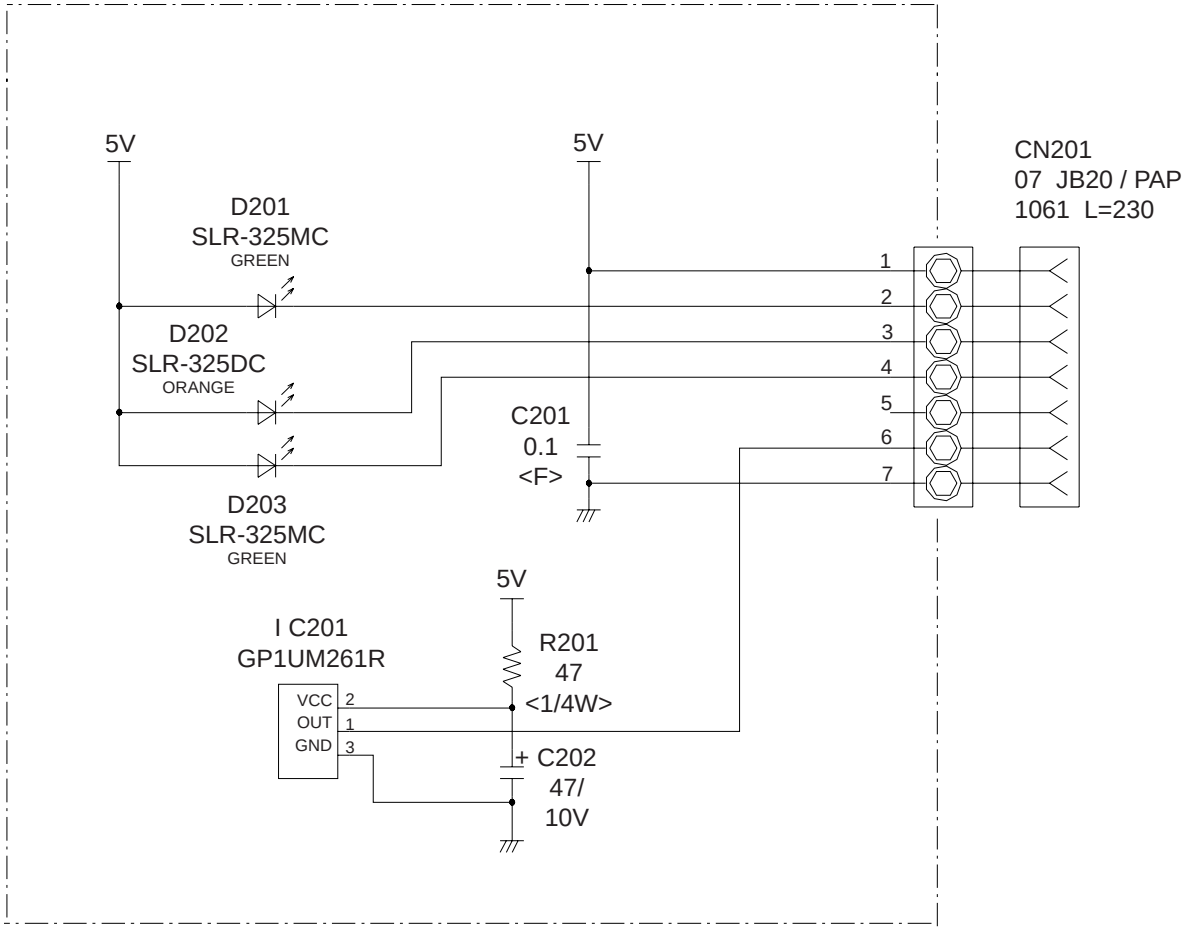

OUTDOOR PCB CIRCUIT DIAGRAM

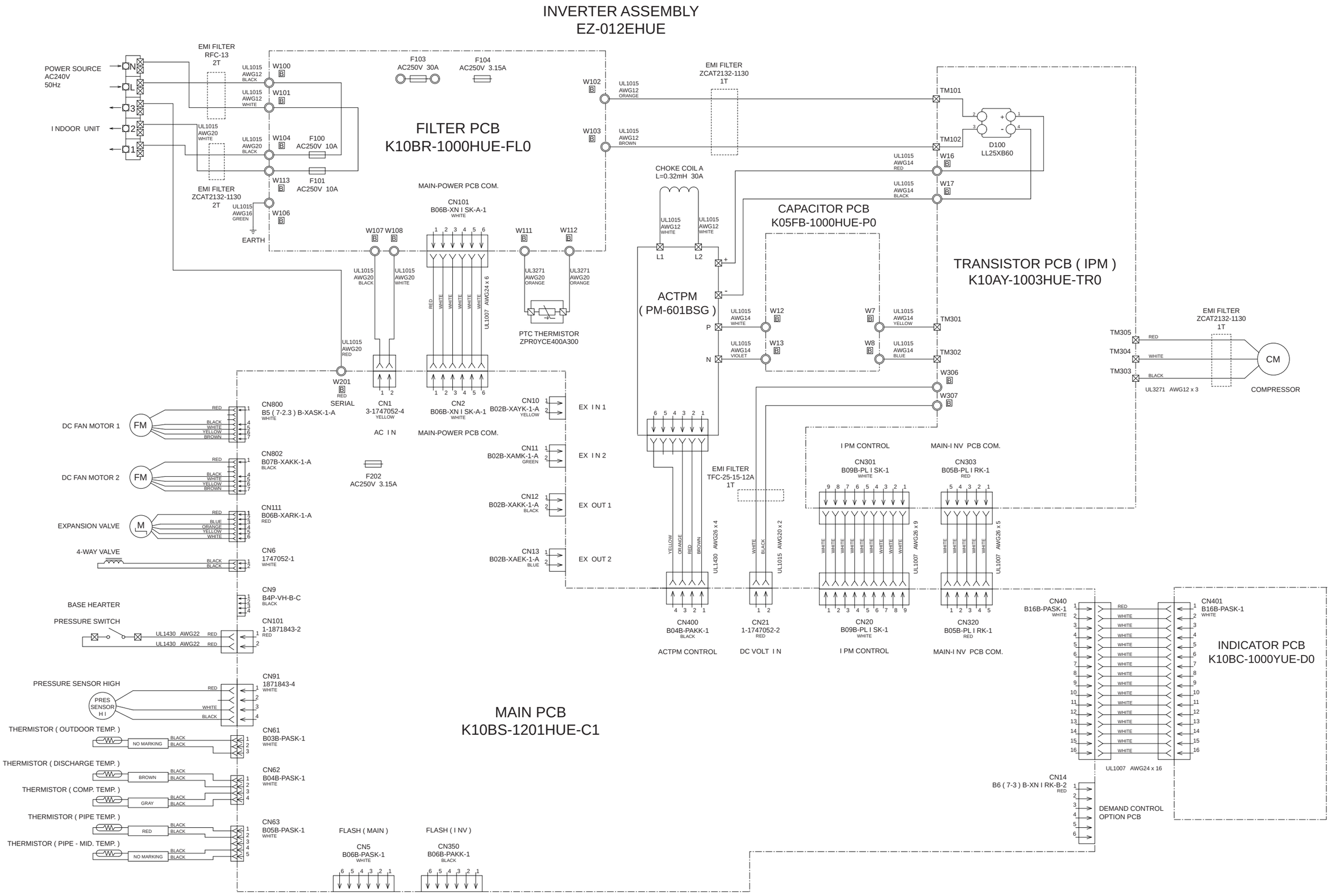

OUTDOOR UNIT
MAIN PCB - 1
K10BS-1201HUE-C1

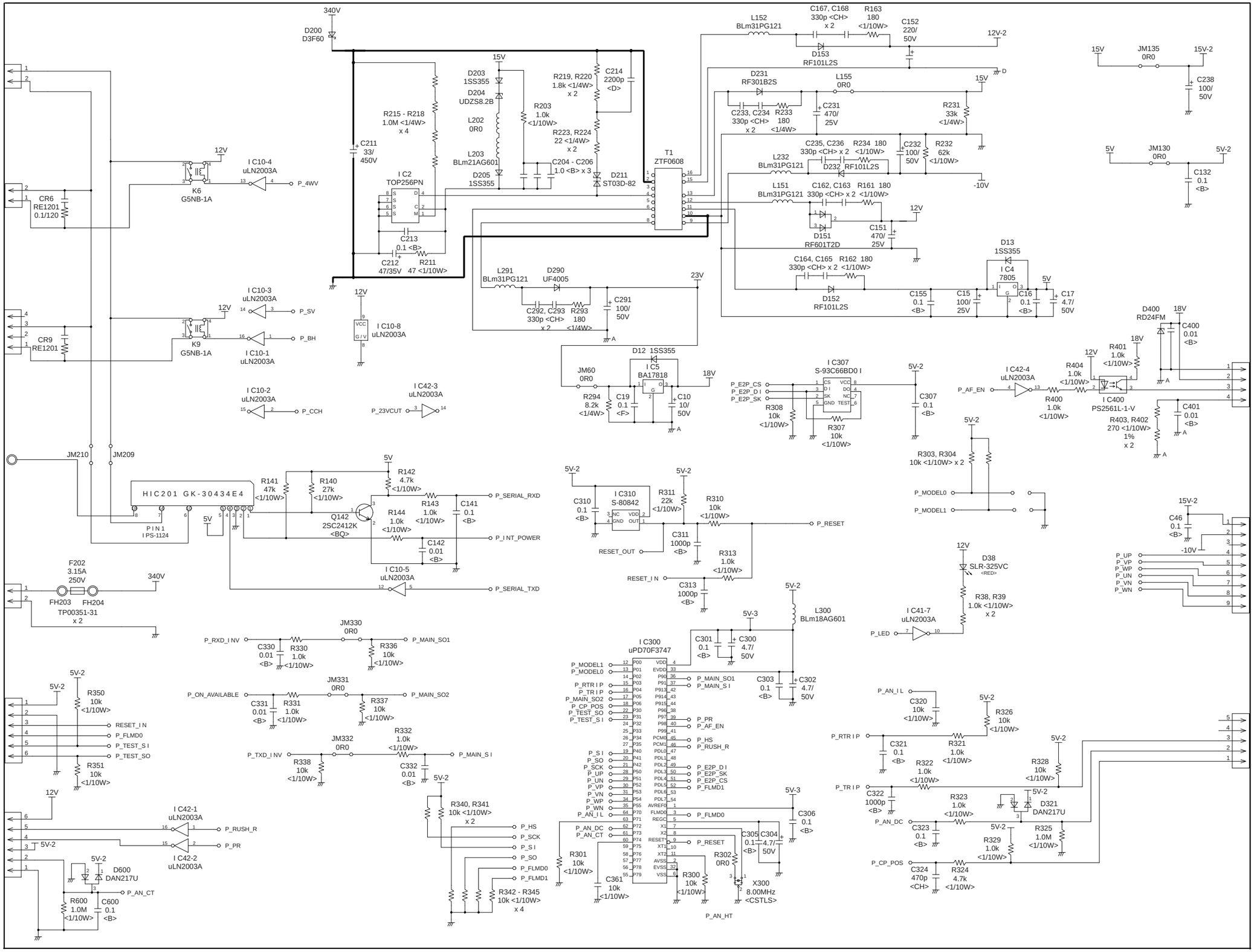

OUTDOOR UNIT
MAIN PCB - 2
K10BS-1201HUE-C1

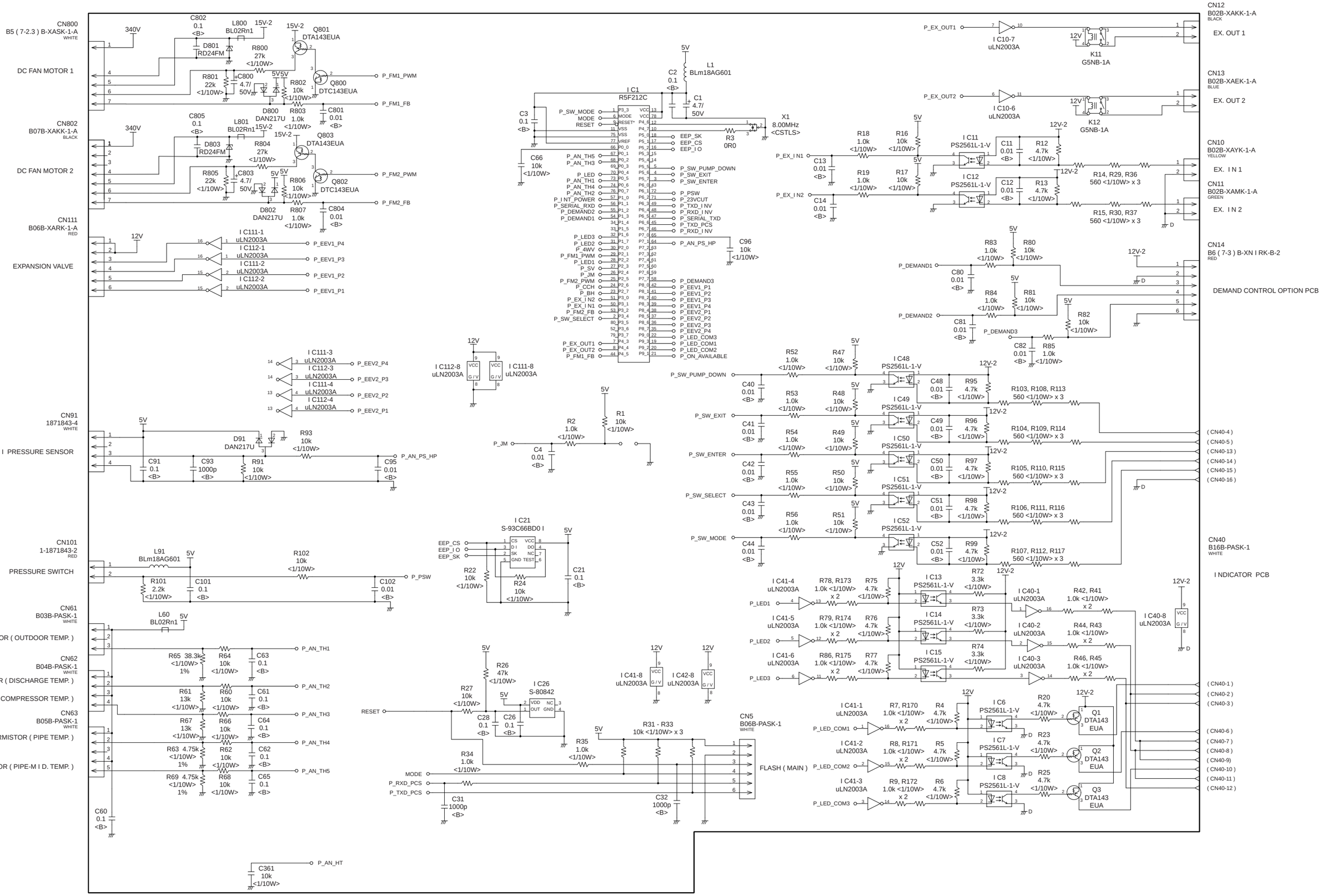

OUTDOOR UNIT
TRANSISTOR PCB (IPM)
K10AY-1003HUE-TR0

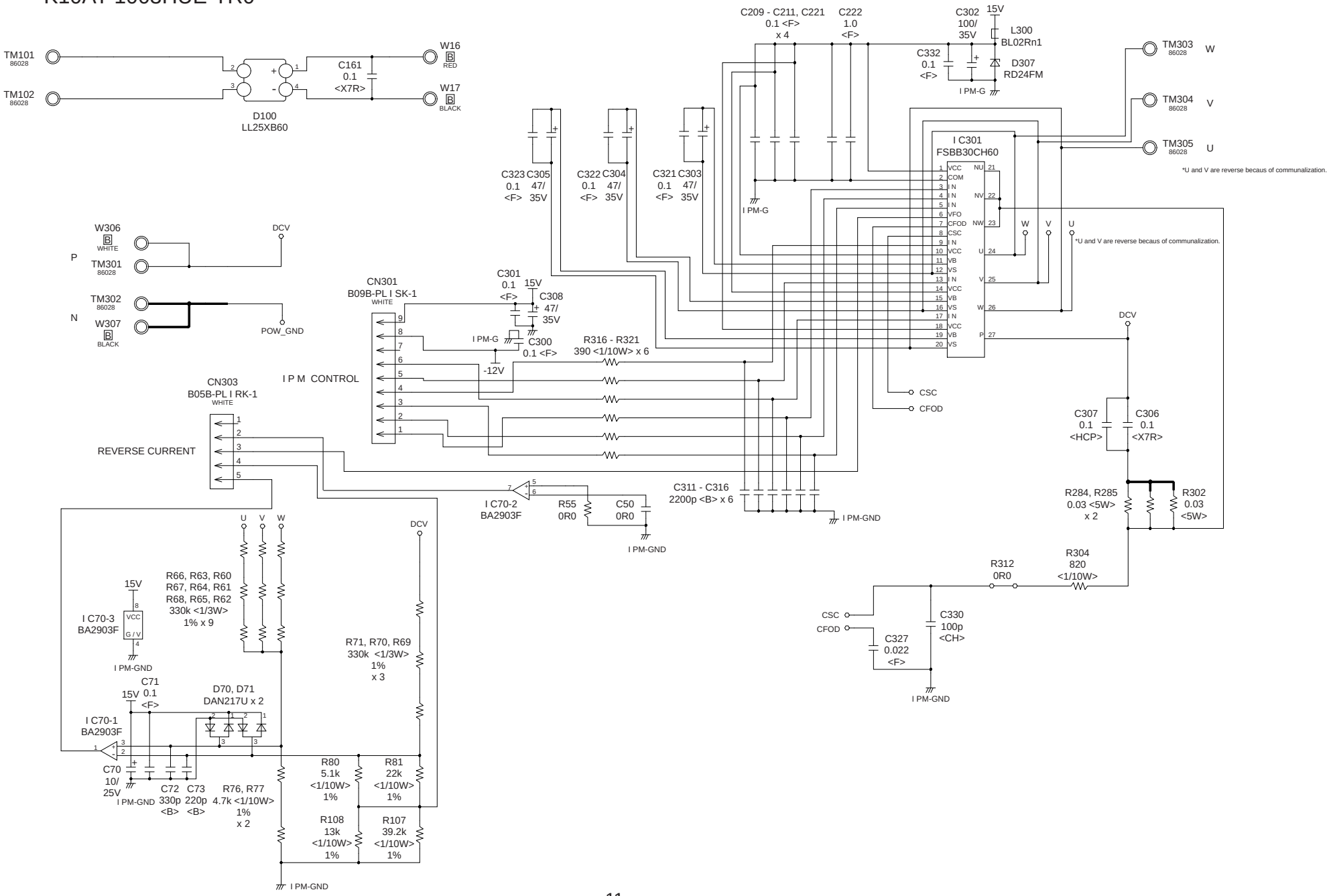

OUTDOOR UNIT
FILTER PCB
K10BR-1000HUE-FL0

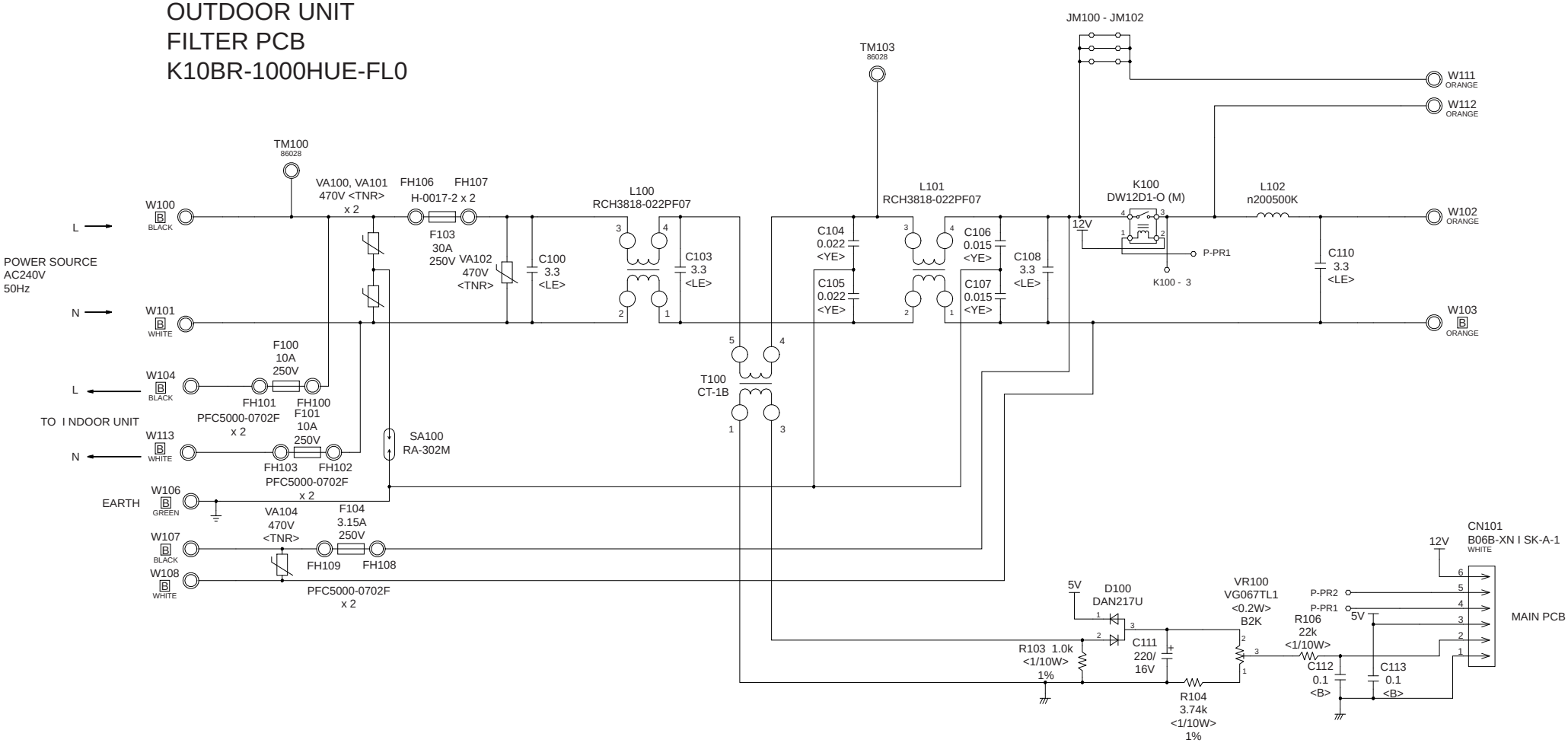

CAPACITOR PCB
K05FB-1000HUE-P0

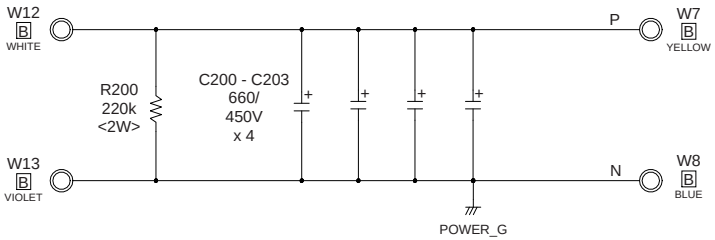

OUTDOOR UNIT
INDICATOR PCB
K10BC-1000YUE-D0

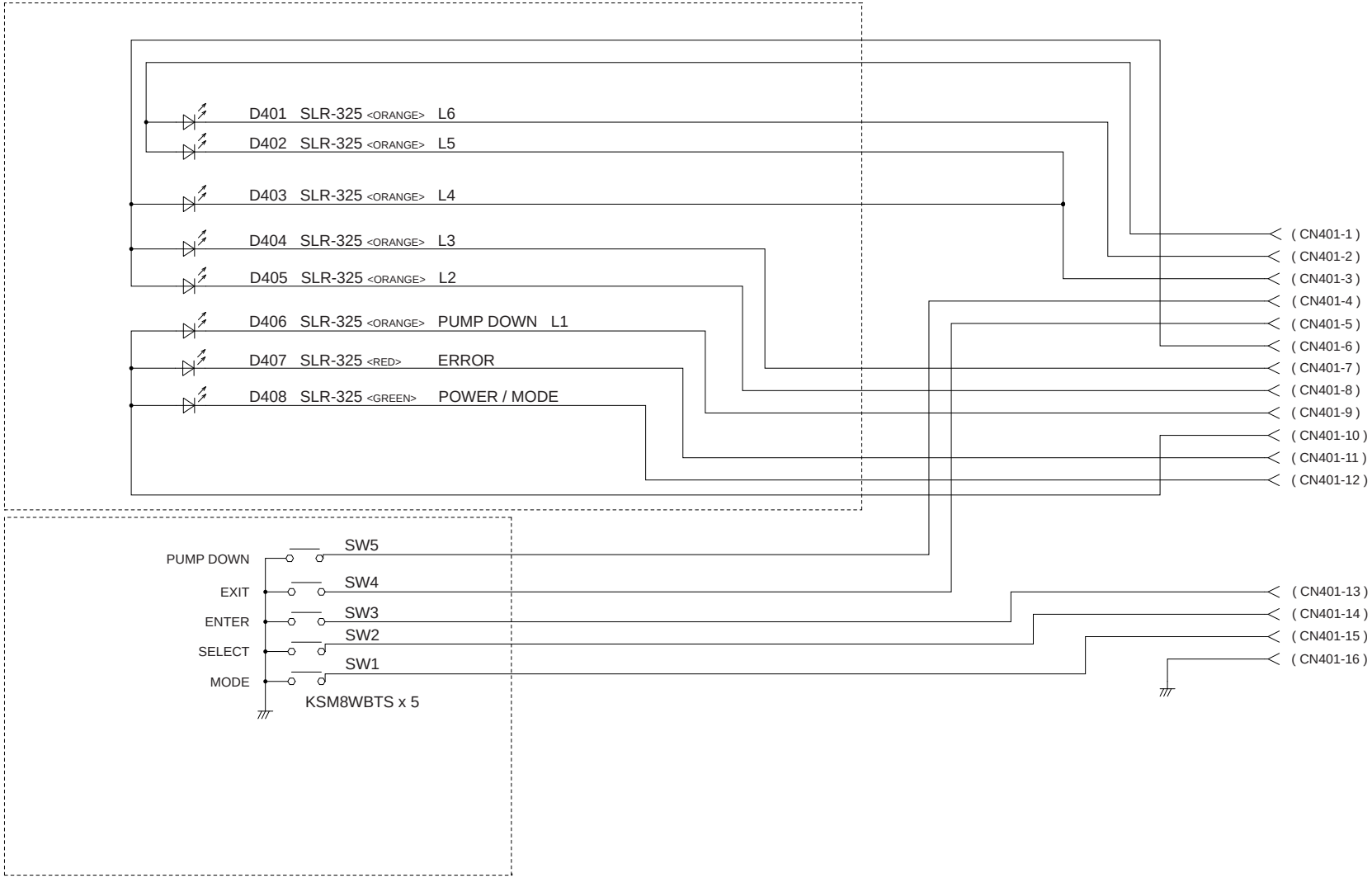

UTY-XCZZ3
DEMAND CONTROL OPTION PCB
K12GV-1202HUE-CA0

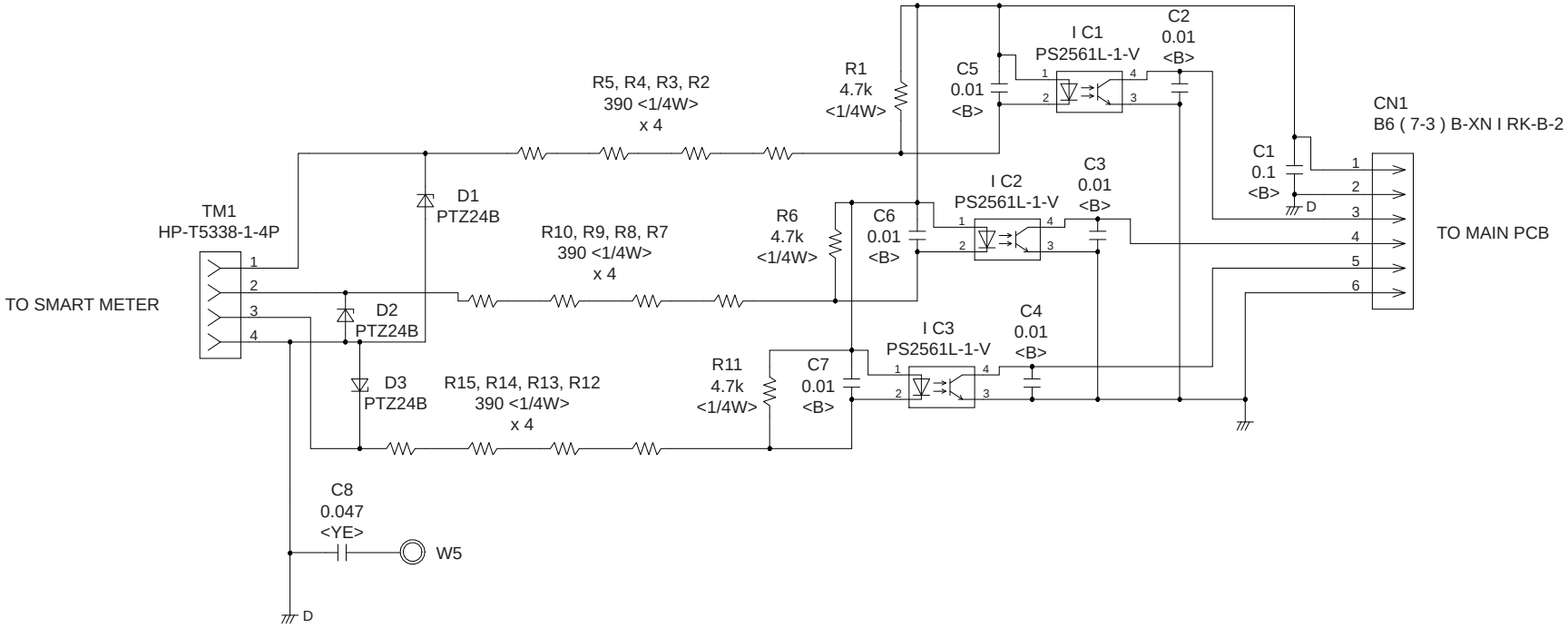

ERROR DETECTION

If you use a wireless remote control, the lamps on the indoor unit will show the error by blinking.
If you use a wired type remote control, error code will appear on the remote control display.
See the lamp blinking patterns and error codes in the table.

Troubleshooting with an indoor unit display

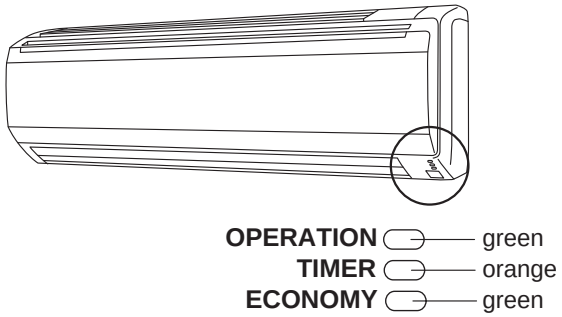

Troubleshooting with a wired remote control.

If an error occurs,
the following display will be shown.
(“Er” will appear in the
set room temperature display.)

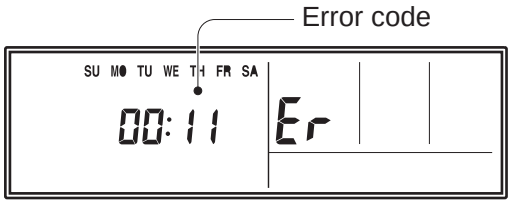

EX. Self-diagnosis

● : 0.5s on / 0.5s off

◇ : 0.1s on / 0.1s off

( ) : Number of flashing

Indoor unit LED			Wired remote control	Description
OPERATION (green)	TIMER (orange)	ECONOMY (green)		
● (1)	● (1)	◇	11	Serial communication error
● (1)	● (2)	◇	12	Wired remote control communication error
● (1)	● (5)	◇	15	Check run unfinished
● (2)	● (1)	◇	21	Unit number or Refrigerant circuit address setting error [Simultaneous Multi]
● (2)	● (2)	◇	22	Indoor unit capacity error
● (2)	● (3)	◇	23	Combination error
● (2)	● (4)	◇	24	• Connection unit number error (indoor slave unit) [Simultaneous Multi] • Connection unit number error (indoor unit or branch unit) [Flexible Multi]
● (2)	● (7)	◇	27	Master unit, slave unit set-up error [Simultaneous Multi]
● (3)	● (2)	◇	32	Indoor unit PCB model information error
● (3)	● (5)	◇	35	Manual auto switch error
● (4)	● (1)	◇	41	Inlet air temp. sensor error
● (4)	● (2)	◇	42	Indoor unit Heat Ex. Middle temp. sensor error
● (5)	● (1)	◇	51	Indoor unit fan motor error
● (5)	● (3)	◇	53	Drain pump error
● (5)	● (7)	◇	57	Damper error
● (5)	● (15)	◇	5U	Indoor unit error
● (6)	● (2)	◇	62	Outdoor unit main PCB model information error or communication error
● (6)	● (3)	◇	63	Inverter error
● (6)	● (4)	◇	64	Active filter error, PFC circuit error
● (6)	● (5)	◇	65	Trip terminal L error

Indoor unit LED			Wired remote control	Description
OPERATION (green)	TIMER (orange)	ECONOMY (green)		
● (6)	● (10)	◇	6A	Display PCB microcomputers communication error
● (7)	● (1)	◇	71	Discharge temp. sensor error
● (7)	● (2)	◇	72	Compressor temp. sensor error
● (7)	● (3)	◇	73	Outdoor unit Heat Ex. liquid temp. sensor error
● (7)	● (4)	◇	74	Outdoor temp. sensor error
● (7)	● (5)	◇	75	Suction Gas temp. sensor error
● (7)	● (6)	◇	76	• 2-way valve temp. sensor error • 3-way valve temp. sensor error
● (7)	● (7)	◇	77	Heat sink temp. sensor error
● (8)	● (2)	◇	82	• Sub-cool Heat Ex. gas inlet temp. sensor error • Sub-cool Heat Ex. gas outlet temp. sensor error
● (8)	● (3)	◇	83	Liquid pipe temp. sensor error
● (8)	● (4)	◇	84	Current sensor error
● (8)	● (6)	◇	86	• Discharge pressure sensor error • Suction pressure sensor error • High pressure switch error
● (9)	● (4)	◇	94	Trip detection
● (9)	● (5)	◇	95	Compressor rotor position detection error (permanent stop)
● (9)	● (7)	◇	97	Outdoor unit fan motor error
● (9)	● (9)	◇	99	4-way valve error
● (10)	● (1)	◇	A1	Discharge temp. error
● (10)	● (3)	◇	A3	Compressor temp. error
● (10)	● (4)	◇	A4	High pressure error
● (10)	● (5)	◇	A5	Low pressure error
● (13)	● (2)	◇	J2	Branch boxes error [Flexible Multi]

OUTDOOR UNIT
Indicator PCB

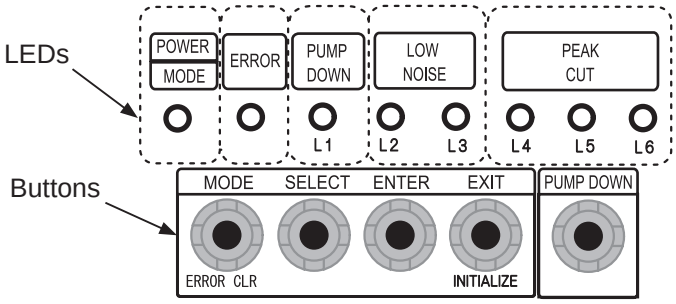

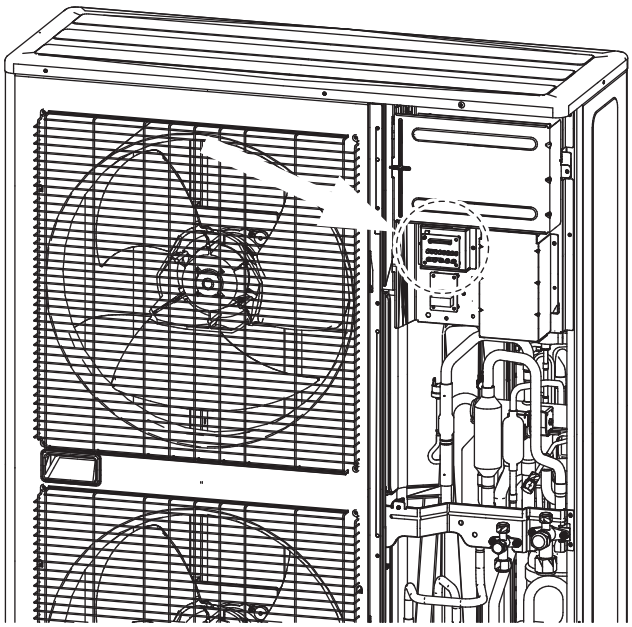

ERROR DETECTION

Display when an error occurs.

POWER	ERROR	PUMP DOWN	LOW NOISE		PEAK CUT		
MODE		(L1)	(L2)	(L3)	(L4)	(L5)	(L6)
On	Blink (Hi speed)	Off	Off	Off	Off	Off	Off

Check that the “ERROR” LED blinks, then press the [Enter] button once.
For details, refer to the following table.

DESCRIPTION	REMARK	LED display							
		POWER MODE	ERROR	PUMP DOWN (L1)	LOW NOISE (L2)	LOW NOISE (L3)	PEAK CUT (L4)	PEAK CUT (L5)	PEAK CUT (L6)
Serial communication error	Serial forward transmission error immediately after operation	Blink (2 times)	On	Blink (1 time)	Blink (1 time)	Off	Off	On	On
	Serial forward transmission error during operation	Blink (2 times)	On	Blink (1 time)	Blink (1 time)	Off	On	Off	Off
Indoor unit capacity error	Indoor unit capacity error	Blink (2 times)	On	Blink (2 times)	Blink (2 times)	Off	Off	Off	On
Indoor unit error	Indoor unit error	Blink (2 times)	On	Blink (5 times)	Blink (15 times)	Off	Off	Off	On
Outdoor unit main PCB error	Outdoor unit PCB model information error	Blink (2 times)	On	Blink (6 times)	Blink (2 times)	Off	Off	Off	On
Inverter PCB error	Inverter error	Blink (2 times)	On	Blink (6 times)	Blink (3 times)	Off	Off	Off	On
IPM error	Trip terminal L error	Blink (2 times)	On	Blink (6 times)	Blink (5 times)	Off	Off	On	On
Discharge temp. sensor error	Discharge temp. sensor 1 error	Blink (2 times)	On	Blink (7 times)	Blink (1 time)	Off	Off	Off	On
Compressor temp. sensor error	Compressor temp. sensor 1 error	Blink (2 times)	On	Blink (7 times)	Blink (2 times)	Off	Off	Off	On
Outdoor unit Heat Ex. sensor error	Heat Ex. centre temp. sensor error	Blink (2 times)	On	Blink (7 times)	Blink (3 times)	Off	Off	On	Off
	Outdoor unit Heat Ex. liquid temp. sensor error	Blink (2 times)	On	Blink (7 times)	Blink (3 times)	Off	Off	On	On
Outdoor temp. sensor error	Outdoor temp. sensor error	Blink (2 times)	On	Blink (7 times)	Blink (4 times)	Off	Off	Off	On
Heat sink temp. sensor error	Heat sink temp. sensor error	Blink (2 times)	On	Blink (7 times)	Blink (7 times)	Off	Off	Off	On
Current sensor error	Current sensor 1 error (stoppage permanently)	Blink (2 times)	On	Blink (8 times)	Blink (4 times)	Off	Off	Off	On
Pressure sensor error	High pressure switch 1 error	Blink (2 times)	On	Blink (8 times)	Blink (6 times)	Off	On	Off	Off
	Pressure sensor error	Blink (2 times)	On	Blink (8 times)	Blink (6 times)	Off	On	On	Off
Trip detection	Trip detection	Blink (2 times)	On	Blink (9 times)	Blink (4 times)	Off	Off	Off	On
Compressor motor control error	Rotor position detection error (stoppage permanently)	Blink (2 times)	On	Blink (9 times)	Blink (5 times)	Off	Off	Off	On
Outdoor unit fan motor 1 error	Duty abnormal	Blink (2 times)	On	Blink (9 times)	Blink (7 times)	Off	Off	On	On
Outdoor unit fan motor 2 error	Duty abnormal	Blink (2 times)	On	Blink (9 times)	Blink (8 times)	Off	Off	On	On
4-way valve error	4-way valve error	Blink (2 times)	On	Blink (9 times)	Blink (9 times)	Off	Off	Off	On
Discharge temp. 1 error	Discharge temp. 1 error	Blink (2 times)	On	Blink (10 times)	Blink (1 time)	Off	Off	Off	On
Compressor temp. error	Compressor 1 temp. error	Blink (2 times)	On	Blink (10 times)	Blink (3 times)	Off	Off	Off	On
Pressure error 2	Low pressure error	Blink (2 times)	On	Blink (10 times)	Blink (5 times)	Off	Off	Off	On

OUTDOOR UNIT
TEST RUN

Before the test run, refer to he figure and check the following items.

☐	Is the outdoor unit securely installed?
☐	Have you performed gas leakage inspection? (Connection joints of various pipes (flang connection, brazing))
☐	Is the heat insulation done completely? (Gas pipe, liquid pipe, drain hose extension on indoor unit side etc)
☐	Is the water discharging from drain without any problems?
☐	Are the cables connected correctly?
☐	Are the cables as per specif cations?
☐	Is the earth wire connected accurately?
☐	Are there any obstacles blocking the suction gate, and outlet of the indoor/outdoor units?
☐	Have you filled the specified amount of refrigerant?
☐	Are the stop valves of gas pipe and liquid pipe fully open?
☐	Has the power been supplied to crankcase heater for more than 6 hours?

If there are problems, adjust immediately and recheck.

Test run method

Be sure to configure test run settings only when the outdoor unit has stopped operating.

Depending on the communication status between the indoor and outdoor units, it may take several minutes for the system to start operating after settings for the test run are complete.
After the test run settings are complete, the outdoor units and the connected indoor units will start operating. Room temperature control will not activate during test operation (continuous operation).
If a knocking sound can be heard in the liquid compression of the compressor, stop the unit immediately and then energize the crank case heater for a suff cient length of time before restarting the operation.

Test run setting method (it can be performed in the following two ways)

Set with test run setting (refer to installation instructions manual of indoor unit for further details) available in the remote control.

Cooling Operation" and Heating Operation" can be set using , SELECT button and ENTER button available on the board of display unit.

(*Make sure to perform the first test run with cooling operation.)

Set as per the procedure given below.

Check items during test run

☐	Is the outdoor unit making any abnormal noise or vibrating signif cantly?
☐	Is the cold air or hot air blowing from indoor unit according to the operation mode?
☐	Check that the "ERROR" LED blinks If, it has displayed, check the error content as per 12.2. described later.
☐	Operate the unit according to the operating manual provided with the indoor unit, and check that it is operating normally.

Setting method

(1) Turn on the power of the outdoor unit and enter standby mode.

POWER	ERROR	PUMP DOWN	LOW NOISE		PEAK CUT		
MODE		(L1)	(L2)	(L3)	(L4)	(L5)	(L6)
On	Off	Off	Off	Off	Off	Off	Off

(2) Press the ENTER button for more than 3 seconds.

POWER	ERROR	PUMP DOWN	LOW NOISE		PEAK CUT		
MODE		(L1)	(L2)	(L3)	(L4)	(L5)	(L6)
Blink	Off	Off	Off	Blink	Off	Off	Off

(3) Press the SELECT button,
LED of the test run mode Switched between "COOL" and "HEAT".

Cooling test mode

POWER	ERROR	PUMP DOWN	LOW NOISE		PEAK CUT		
MODE		(L1)	(L2)	(L3)	(L4)	(L5)	(L6)
Blink	Off	Off	Off	Blink	Off	Off	Off

Heating test mode

POWER	ERROR	PUMP DOWN	LOW NOISE		PEAK CUT		
MODE		(L1)	(L2)	(L3)	(L4)	(L5)	(L6)
Blink	Off	Off	Blink	Off	Off	Off	Off

(4) After confirmin the operation mode, Press ENTER button.
The display changes as follows, and Air conditioner starts operation.

Cooling test mode

POWER	ERROR	PUMP DOWN	LOW NOISE		PEAK CUT		
MODE		(L1)	(L2)	(L3)	(L4)	(L5)	(L6)
Blink	Off	Off	Off	On	Off	Off	Off

Heating test mode

POWER	ERROR	PUMP DOWN	LOW NOISE		PEAK CUT		
MODE		(L1)	(L2)	(L3)	(L4)	(L5)	(L6)
Blink	Off	Off	On	Off	Off	Off	Off

(5) Press [ENTER] button.
Air conditioner stopped operation.

POWER	ERROR	PUMP DOWN	LOW NOISE		PEAK CUT		
MODE		(L1)	(L2)	(L3)	(L4)	(L5)	(L6)
On	Off	Off	Off	Off	Off	Off	Off

OUTDOOR UNIT
PUMP DOWN

⚠ WARNING
Never touch electrical components such as the terminal blocks except the button on the display board. It may cause a serious accident such as electric shock.
During the pump-down operation, make sure that the compressor is turned off before you remove the refrigerant piping. Do not remove the connection pipe while the compressor is in operation with 2-way or 3-way valve open. This may cause abnormal pressure in the refrigeration cycle that leads to breakage and even injury.

⚠ CAUTION
Perform the pump down operation before disconnecting any refrigerant pipe or electric cable.
Collect refrigerant from the service port or the 3-way valve if pump down cannot be performed.
In case of a group control system installation, do not turn the power off pump down is completed in all outdoor units. (Group control system installation described in SPECIAL INSTALLATION METHODS" in the installation manual of the indoor unit.)

- Operate [PUMPDOWN] button on the display board in the manner described below.

Preparation for pump down
Confirm that the power is off, and then open the service panel.

(Note)

- To stop pump down, press the [PUMP DOWN] button again.
- To start the pump down again after the compressor is automatically stopped due to an error, turn the power off and open the 3-way valves. Wait 3 minutes, turn the power on and start the pump down again.
- When starting the operation after completion of the pump down, turn the power off, and then open the 3-way valves. Wait 3 minutes, turn the power on and perform a test run in the "COOL" operation mode.
- If an error occurs, recover the refrigerant from service port.

Procedure

(1) Check the 3-way valves (both the liquid side and gas side) are opened.

(2) Turn the power on.

POWER	ERROR	PUMP DOWN	LOW NOISE		PEAK CUT		
MODE		(L1)	(L2)	(L3)	(L4)	(L5)	(L6)
On	Off	Off	Off	Off	Off	Off	Off

(3) Press [PUMP DOWN] button for 3 seconds or more after 3 minutes after power on.

POWER	ERROR	PUMP DOWN	LOW NOISE		PEAK CUT		
MODE		(L1)	(L2)	(L3)	(L4)	(L5)	(L6)
On	Off	On	Off	Off	On	On	On

LED display lights on as shown in the above figure and the fans and the compressor start operating.

- If the [PUMP DOWN] button is pressed while the compressor is operating, the compressor will stop, then start again in about 3 minutes.

(4) LED display will change as shown below about 3 minutes after the compressor starts. Fully close the 3-way valve on the liquid pipe side at this stage.

POWER	ERROR	PUMP DOWN	LOW NOISE		PEAK CUT		
MODE		(L1)	(L2)	(L3)	(L4)	(L5)	(L6)
On	Off	On	Off	Off	Off	On	On

- If the valve on the liquid pipe side is not closed, the pump down cannot be performed.

(5) When LED display changes as shown in the below figure close the 3-way valve on the gas pipe side tightly.

POWER	ERROR	PUMP DOWN	LOW NOISE		PEAK CUT		
MODE		(L1)	(L2)	(L3)	(L4)	(L5)	(L6)
On	Off	On	Off	Off	Off	Off	On

- if the valve on the gas pipe side is not closed, refrigerant may flow into the piping after the compressor stops.

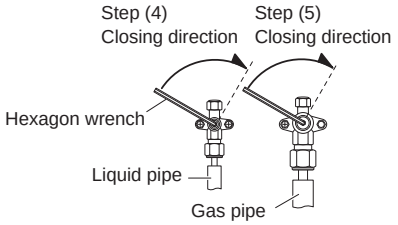

(6) LED display changes after 1 minute as shown in the figure below.

POWER	ERROR	PUMP DOWN	LOW NOISE		PEAK CUT		
MODE		(L1)	(L2)	(L3)	(L4)	(L5)	(L6)
On	Off	On	Off	Off	Off	Off	Off

Fans and compressor stop automatically.

- If the pump down is successfully completed (the above LED display is shown), the outdoor unit remains stopped until the power is turned off.

(7) Turn the power off.

POWER	ERROR	PUMP DOWN	LOW NOISE		PEAK CUT		
MODE		(L1)	(L2)	(L3)	(L4)	(L5)	(L6)
Off	Off	Off	Off	Off	Off	Off	Off

PUMP DOWN is completed.

DEMAND RESPONSE (DR) and indoor unit operation

This product is designed to be compatible with
Air Conditioning Demand Response program.

To utilize the function, Demand Response adapter kit that interconnects your air conditioner and Demand Response Enabling Device (DRED) needs to be installed in your air conditioning system, and you need a separate arrangement.

When your electricity supplier activates one of the following 3 DR modes, the air conditioner switches over to the appropriate operation, and the OPERATION indicator (green) on the indoor unit blinks to inform you it has been entered to the DR mode.

Blinking pattern

ON (4 seconds) → OFF (0.5 seconds) → ON (0.5 seconds) → OFF (0.5 seconds) → ON (4 seconds)

The indicator will keep blinking until the unit finishes the function.

OPERATION indicator
(indoor unit)

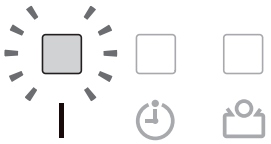

Note: Shape, number, and the arrangement of the indicators are unit-dependent. Some indoor units may not have the indicators unless the optional control panel or IR receiver kit has been installed.

DR mode	Description of operation in this mode
DR mode 1	Compressor off.
DR mode 2	The air conditioner continues to cool or heat during the Demand Response event, but the electrical energy consumed by the air conditioner in a half hour period is not more than 50% of the total electrical energy that would be consumed if operating at the rated capacity in a half hour period.
DR mode 3	The air conditioner continues to cool or heat during the Demand Response event, but the electrical energy consumed by the air conditioner in a half hour period is not more than 75% of the total electrical energy that would be consumed if operating at the rated capacity in a half hour period.

When the unit goes into a DR mode, it performs moderate operation though the cooling or heating effect may be reduced. You cannot override this function with changing the temperature setting by using the remote control or other actions unless the unit finishes the function.

Note: Stopping the operation of the air conditioner by using the remote control or by OFF timer are valid in DR mode. If the timer operation is interfered by an interruption of power supply such as a blackout and the power supply is resumed, no indication of the DR mode is performed.
During the DR mode, no indication of "filter sign" is performed.
Powerful operation is performedwithin the operable range of the DR mode.

When the unit finishes the function, it will perform the operation that was previously performed before entering the DR mode.
When this air conditioner is connected to a DRED, and you have operational issues, contact your electricity supplier first to check whether they are activating any of the DR mode described above.
If the air conditioner is under demand controlling, consult on the issues with your electricity supplier.
If they are not demand controlling the air conditioner, refer to your warranty card for the contact details of Fujitsu General (AUST.) PTY LIMITED or
visit our website : www.fujitsugeneral.com.au

PARTS

INDOOR UNIT

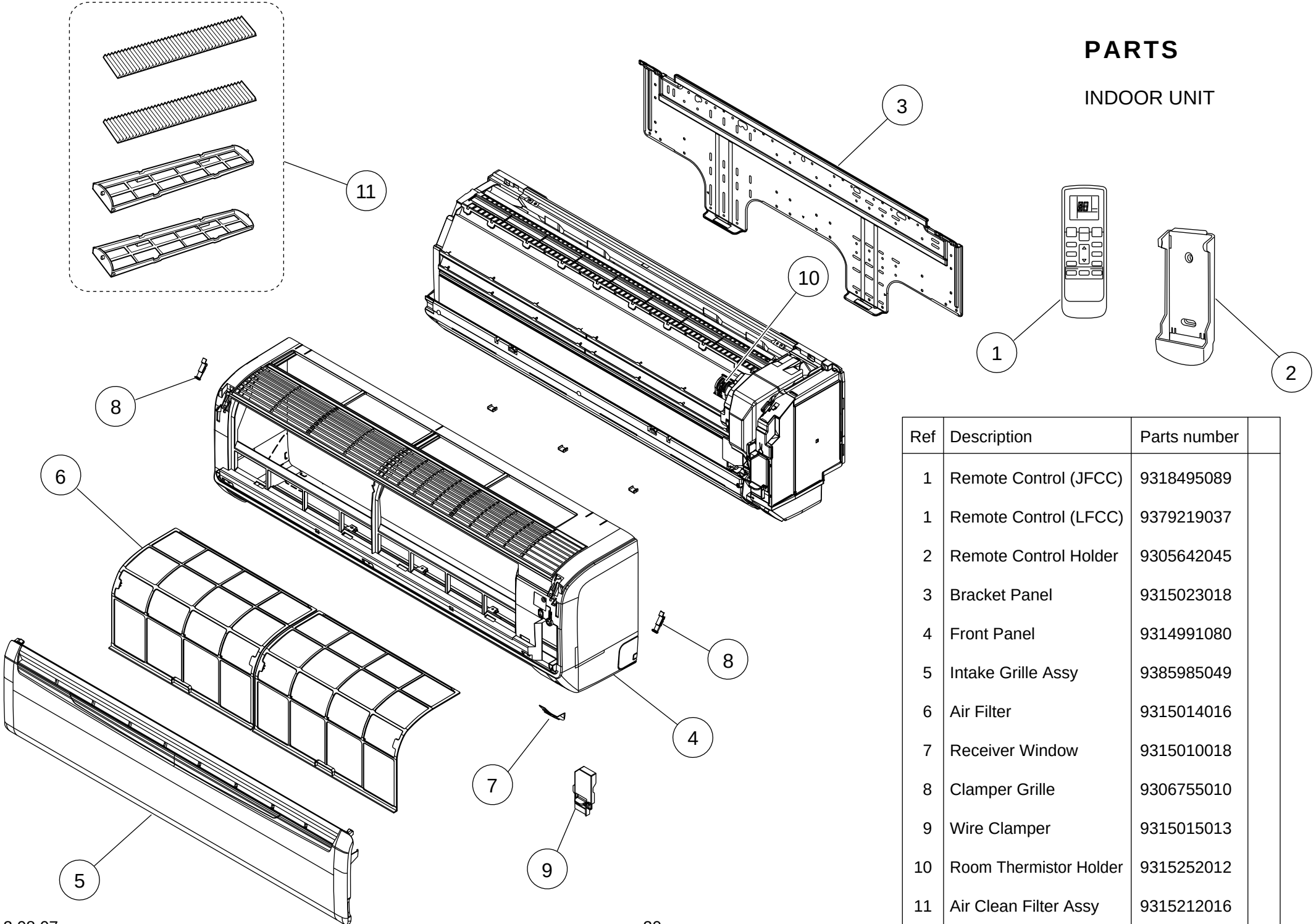

Ref	Description	Parts number	
1	Remote Control (JFCC)	9318495089	
1	Remote Control (LFCC)	9379219037	
2	Remote Control Holder	9305642045	
3	Bracket Panel	9315023018	
4	Front Panel	9314991080	
5	Intake Grille Assy	9385985049	
6	Air Filter	9315014016	
7	Receiver Window	9315010018	
8	Clamper Grille	9306755010	
9	Wire Clamper	9315015013	
10	Room Thermistor Holder	9315252012	
11	Air Clean Filter Assy	9315212016	

INDOOR UNIT

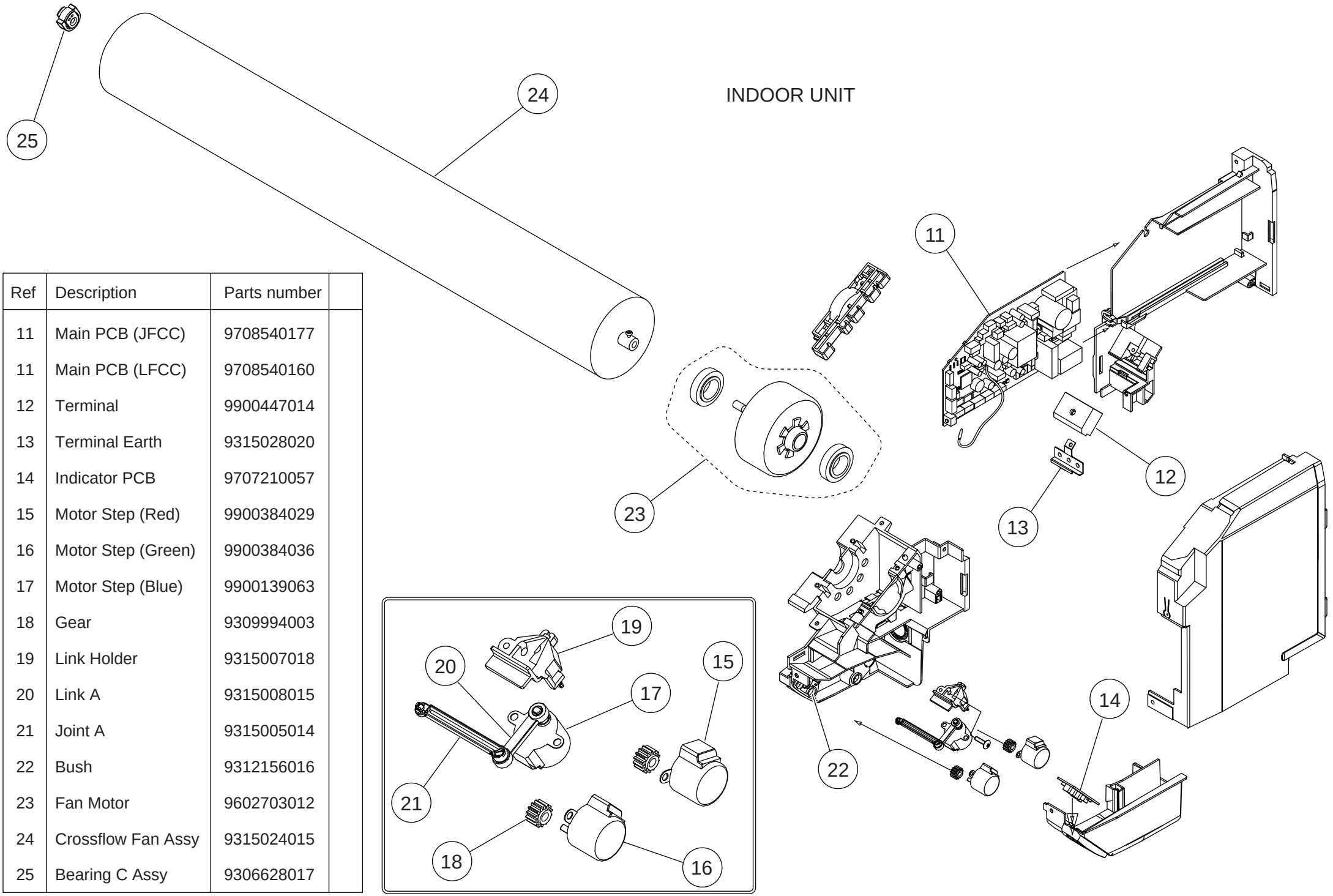

Ref	Description	Parts number	
11	Main PCB (JFCC)	9708540177	
11	Main PCB (LFCC)	9708540160	
12	Terminal	9900447014	
13	Terminal Earth	9315028020	
14	Indicator PCB	9707210057	
15	Motor Step (Red)	9900384029	
16	Motor Step (Green)	9900384036	
17	Motor Step (Blue)	9900139063	
18	Gear	9309994003	
19	Link Holder	9315007018	
20	Link A	9315008015	
21	Joint A	9315005014	
22	Bush	9312156016	
23	Fan Motor	9602703012	
24	Crossflow Fan Assy	9315024015	
25	Bearing C Assy	9306628017	

INDOOR UNIT
Casing assy

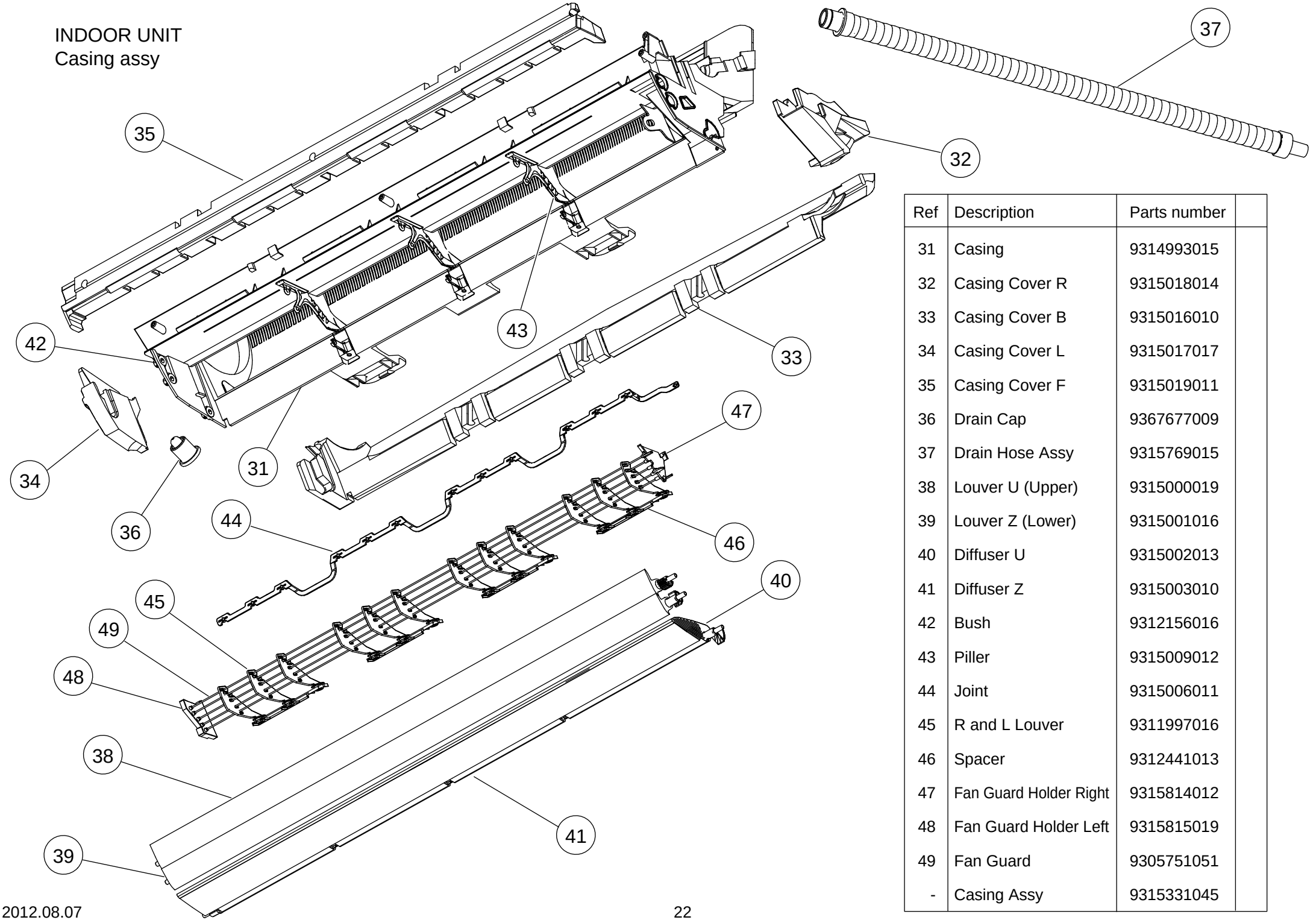

Ref	Description	Parts number	
31	Casing	9314993015	
32	Casing Cover R	9315018014	
33	Casing Cover B	9315016010	
34	Casing Cover L	9315017017	
35	Casing Cover F	9315019011	
36	Drain Cap	9367677009	
37	Drain Hose Assy	9315769015	
38	Louver U (Upper)	9315000019	
39	Louver Z (Lower)	9315001016	
40	Diffuser U	9315002013	
41	Diffuser Z	9315003010	
42	Bush	9312156016	
43	Piller	9315009012	
44	Joint	9315006011	
45	R and L Louver	9311997016	
46	Spacer	9312441013	
47	Fan Guard Holder Right	9315814012	
48	Fan Guard Holder Left	9315815019	
49	Fan Guard	9305751051	
-	Casing Assy	9315331045	

INDOOR UNIT

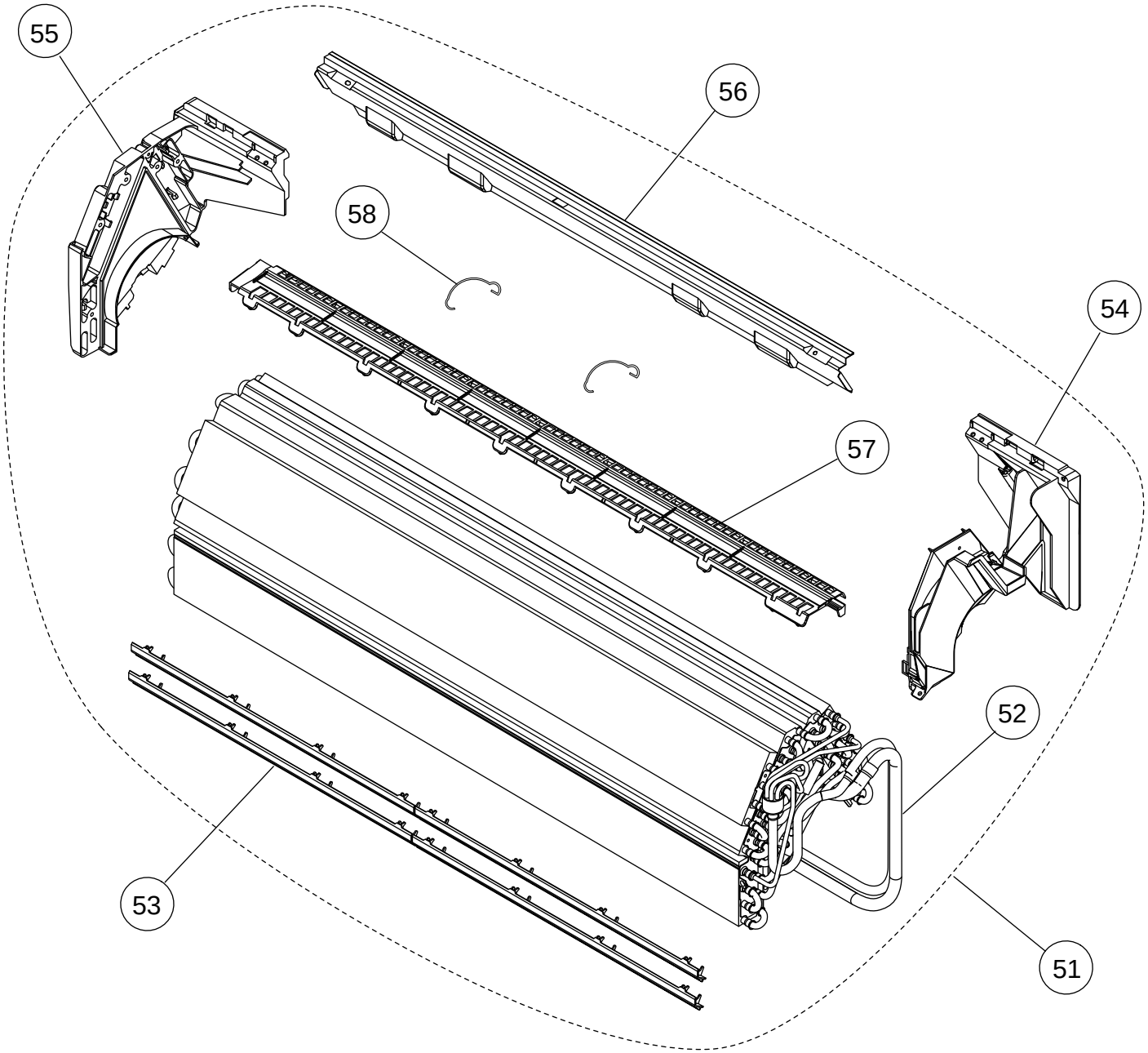

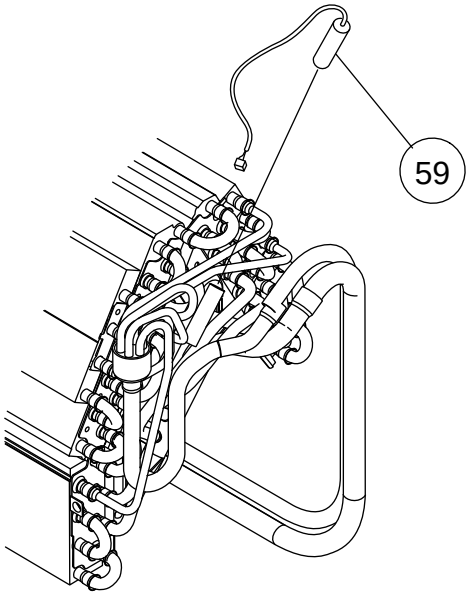

Ref	Description	Parts number	
51	Evaporator Total Assy	9315338020	
52	Connection Pipe Assy	9315355010	
53	Water Seal	9315251015	
54	Evaporator Holder R	9314994012	
55	Evaporator Holder L	9314995019	
56	Rear Bracket	9315022011	
57	Filter Guide	9315013019	
58	Filter Guard	9315411013	
59	Pipe Thermistor	9900551018	

PARTS

OUTDOOR UNIT

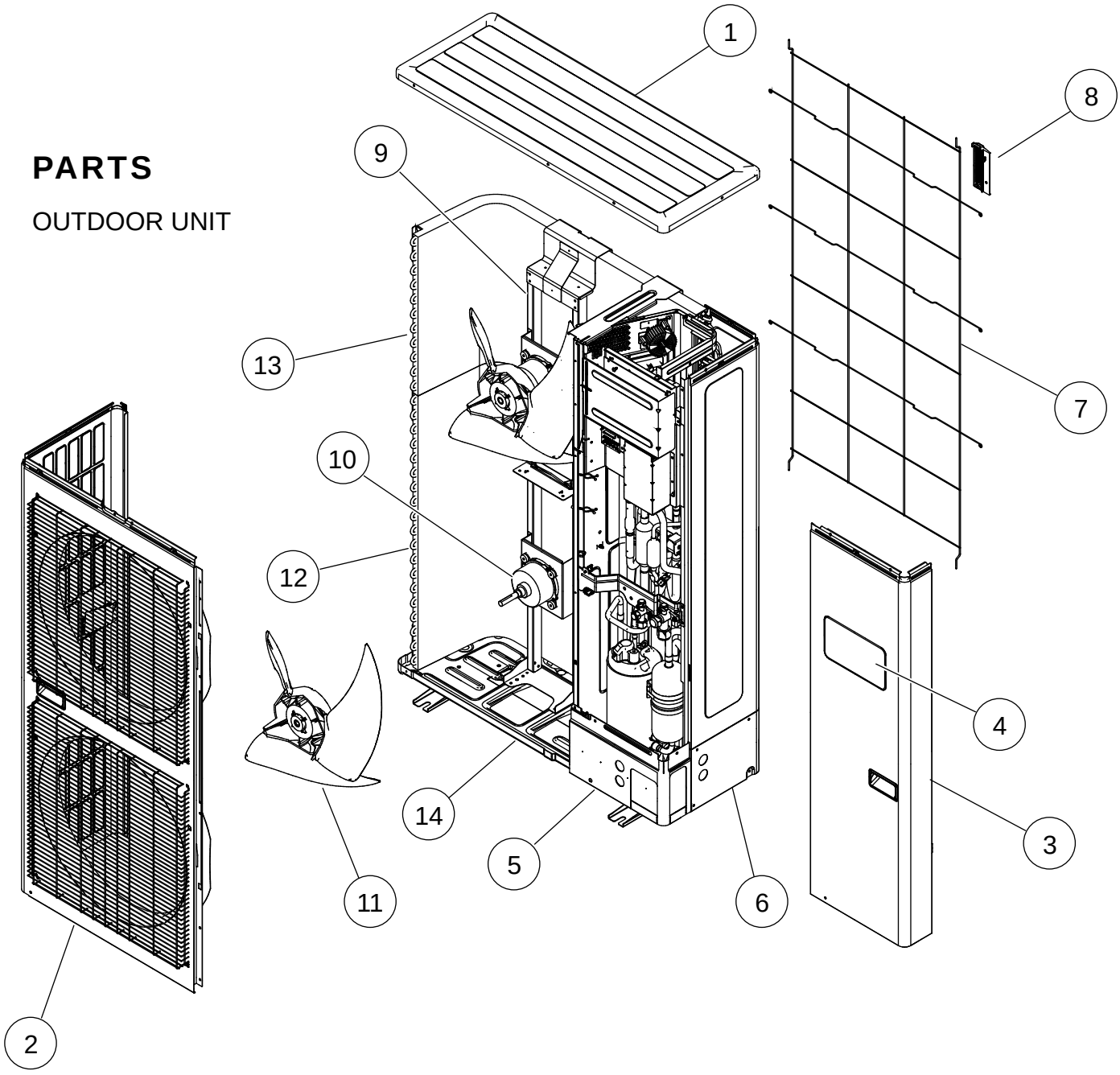

Ref.	Description	Parts number	
1	Top Panel Sub Assy	9374417056	
2	Front Panel Sub Assy	9374414109	
3	Sevice Panel Sub Assy	9374415090	
4	Emblem Rear	9351355005	
5	Pipe Cover Front	9378861015	
6	Right Panel Sub Assy	9374416189	
7	Protective Net	9375381042	
8	Thermo Holder	9375211011	

Ref.	Description	Parts number	
9	Motor Bracket Sub Assy	9374418169	
10	Motor DC Brushless	9602843015	
11	Propeller Fan Assy	9366378020	
12	Condenser A Sub Assy	9374420261	
13	Condenser B Sub Assy	9374422081	
14	Base Assy	9374166220	
--	Drain Assy (LFTC)	9303029015	
--	Drain Cap (LFTC)	313166024302	

OUTDOOR UNIT
Control box

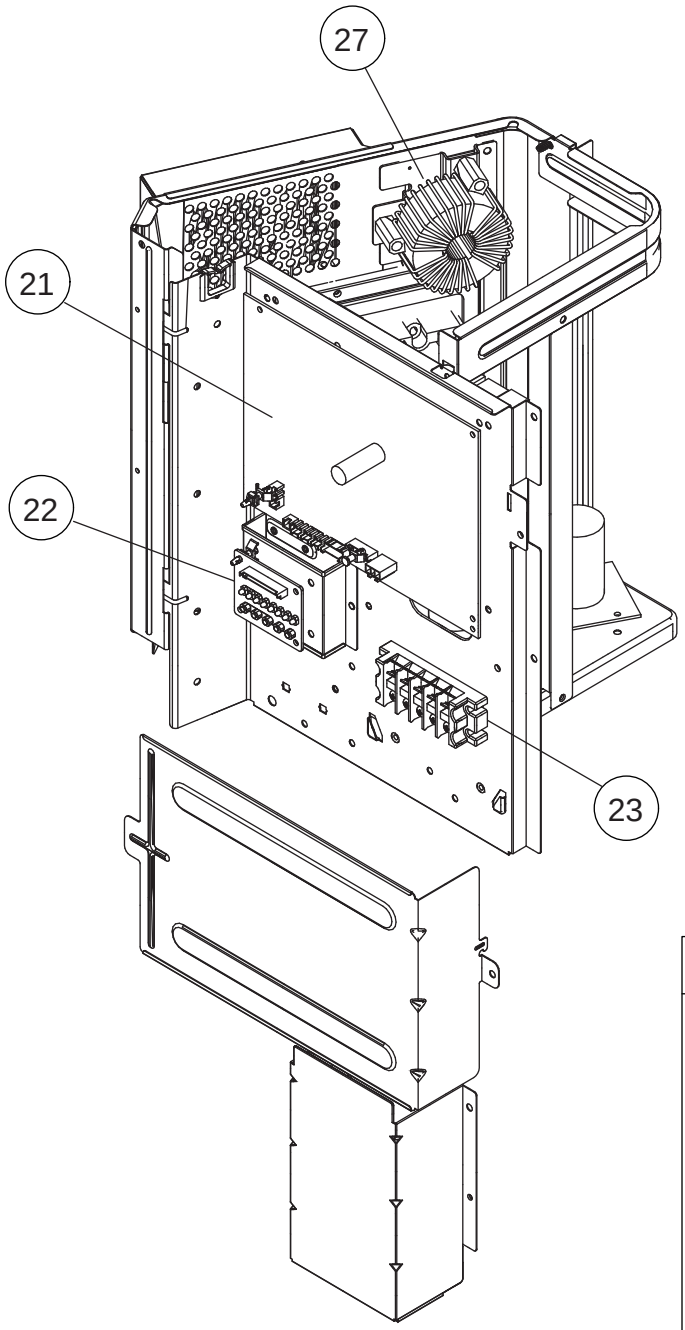

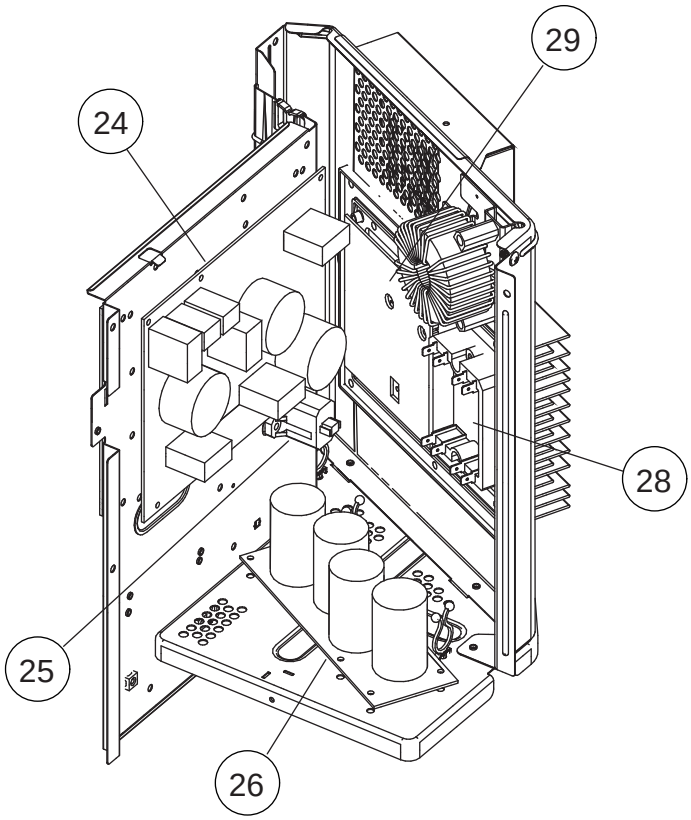

Ref.	Description	Parts number	
21	Main PCB	9708690124	
22	Indicator PCB	9708678016	
23	Terminal	9900203023	
24	Filter PCB	9708688015	
25	Thermistor	9704265012	
26	Capacitor PCB	9707257083	
27	Choke Coil	9900624019	
28	ACTPM	9707592016	
29	Transistor PCB Assy	9708647043	
--	Thermistor (Outdoor)	9900210069	
--	Thermistor Assy (5 pins)	9900599027	
--	Thermistor Assy (4 pins)	9900598013	

OUTDOOR UNIT

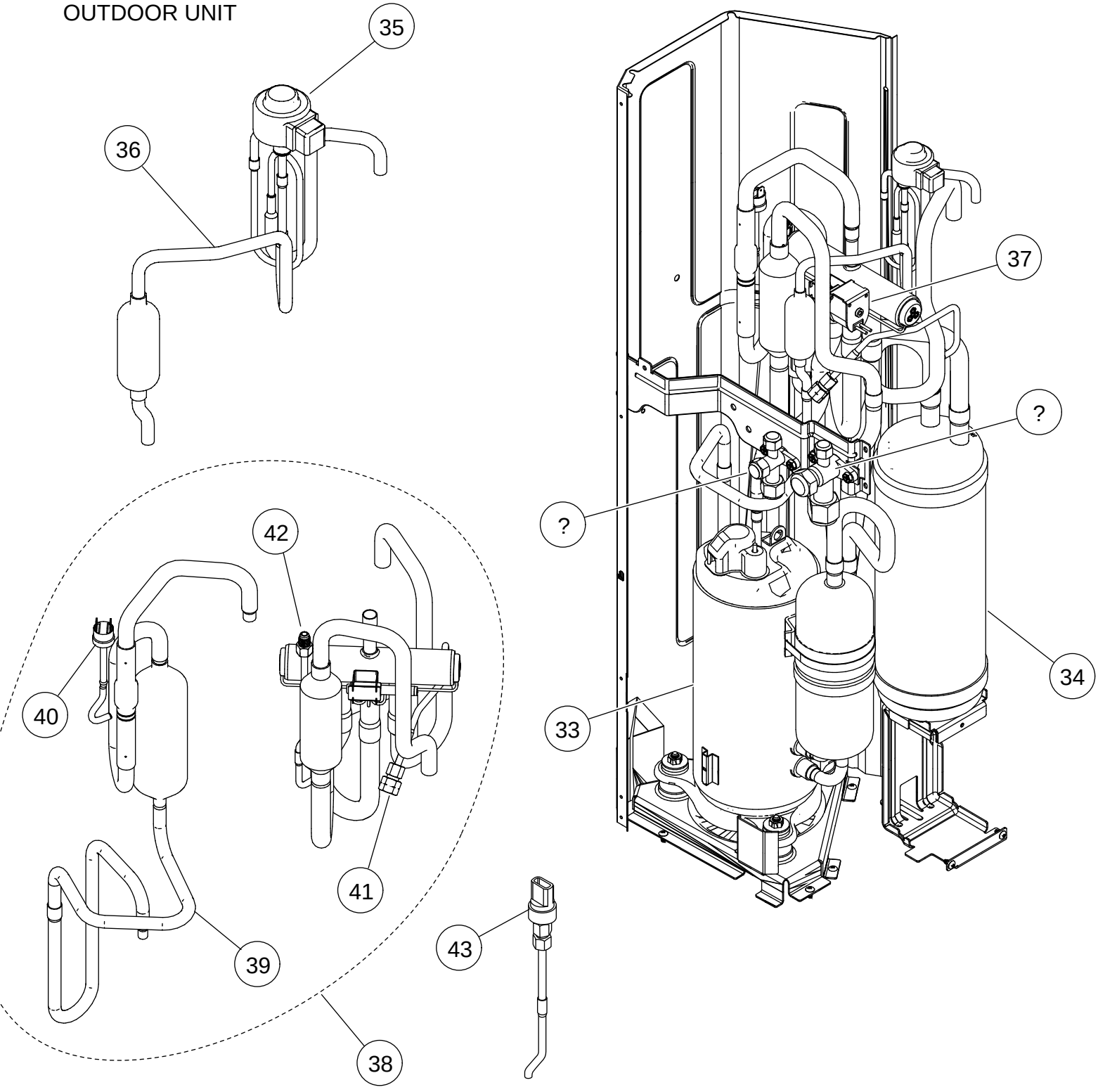

Ref.	Description	Parts number	
31	3-way Valve Assy	9379079006	
32	3-way Valve Assy	9379077002	
33	Compressor	9810153005	
34	Accumulator	9379014021	
35	Expansion Valve Coil	9970096044	
36	Expansion Valve Assy	9370947243	

Ref.	Description	Parts number	
37	Solenoid	9970055072	
38	4-way Valve Assy	9374425235	
39	Discharge Pipe Assy	9371581248	
40	Pressure Switch	9900186012	
41	Check Joint Assy	9372802038	
42	Union joint Assy	9379068000	
43	Sensor	9900505080	

ACCESSORIES

INDOOR UNIT

Name and Shape	Part number
Wall hook bracket	9315023018
Remote control	9318495089 (AR-RAJ8E for ASTG34JFCC) 9379219037 (AR-RAH2E for ASTG34LFCC)
Remote control holder	9305642045
Battery (penlight)	0600185541
Cloth tape	9310519004
Tapping screw (big)	0700076046
Tapping screw (small)	0700019036
Air cleaning filter (Apple katekin)	9312153060
Air cleaning filter (Ion deodorant)	9311925071
Filter holder	9368568009

OUTDOOR UNIT (AOTG34LFCC)

Name and Shape	Part number
Drain assy	9303029015
Drain cap	313166024302

"Demand response" for outdoor unit

Parts list for demand control option PCB kit (optional parts)

Parts name	Q'ty	Use
Demand control option PCB, Option PCB holder	1	
Connector cable 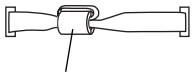 (small core)	1	For connecting the demand control option PCB
Cable ties with clips 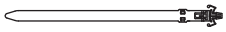	1	For fixing the signal transmission cable
Cable ties	1	For fixing the EMI core and the signal transmission cable (one is a spare)
Tapping screw	2	For attaching the option PCB holder
Taptite screw	1	For connecting the earth (ground) cable
EMI core 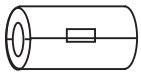	1	Attached to the signal transmission cable
Insulation 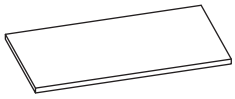	2	Attached to the EMI core

1208G4098