Split type room air conditioner
Wall-mounted type

FUJITSU

SERVICE MANUAL

Indoor unit	Outdoor unit
ASTG18KMTC	AOTG18KMTC
ASTG22KMTC	AOTG22KMTC
ASTG24KMTC	AOTG24KMTC

Refrigerant R32

CONTENTS

SPECIFICATIONS 1
DIMENSIONS 3
REFRIGERANT SYSTEM DIAGRAM 5
PCB CIRCUIT DIAGRAM 6
ERROR DETECTION 8
PARTS (INDOOR UNIT) 10
PARTS (OUTDOOR UNIT) 19
ACCESSORIES 24

FUJITSU GENERAL LIMITED

Specifications

Type					Wall mounted		
					Inverter heat pump		
Model name					**ASTG18KMTC**	**ASTG22KMTC**	**ASTG24KMTC**
Power supply					240 V ~ 50 Hz		
Power supply intake					Outdoor unit		
Available voltage range					198—264 V		
Star rating index		10-star standard		Cooling	4.0	3.0	2.5
				Heating	5.0	4.0	4.0
Capacity		Cooling	Rated	kW	5.00	6.00	7.10
				Btu/h	17,100	20,400	24,200
			Min.—Max.	kW	1.00—6.50	1.10—7.50	1.10—8.30
				Btu/h	3,500—22,100	3,800—25,500	3,800—28,300
		Heating	Rated	kW	6.00	7.20	8.00
				Btu/h	20,400	24,600	27,300
			Min.—Max.	kW	1.05—8.70	1.10—9.40	1.10—10.10
				Btu/h	3,600—29,600	3,800—32,000	3,800—34,400
Input power		Cooling	Rated	kW	1.16	1.58	2.08
			Min.—Max.		0.24—1.68	0.24—2.30	0.24—3.15
		Heating	Rated		1.28	1.70	1.91
			Min.—Max.		0.14—2.42	0.14—2.63	0.14—3.00
		Fan	HIGH	W	41.4	47.0	61.6
			MED		26.7	26.7	26.7
			LOW		13.3	13.3	13.3
			QUIET		8.2	8.2	8.2
Current		Cooling	Rated	A	5.1	6.8	8.9
		Heating			5.6	7.4	8.3
EER		Cooling		kW/kW	4.31	3.80	3.41
COP		Heating			4.69	4.24	4.19
Sensible capacity		Cooling		kW	4.14	4.46	5.30
Power factor		Cooling		%	96	97	98
		Heating			96	96	96
Moisture removal				L/h (pints/h)	1.3 (2.3)	2.3 (4.0)	2.7 (4.8)
Maximum operating current *1		Cooling		A	9.5	13.0	
		Heating			13.5	16.0	
Fan	Airflow rate	Cooling	HIGH	l/s (m^3/h)	283 (1,020)	294 (1,060)	325 (1,170)
			MED		236 (850)		
			LOW		178 (640)		
			QUIET		142 (510)		
		Heating	HIGH		283 (1,020)	294 (1,060)	325 (1,170)
			MED		236 (850)		
			LOW		178 (640)		
			QUIET		142 (510)		
	Type × Q'ty				Cross flow fan × 1		
	Motor output			W	59		
Sound pressure level *2		Cooling	HIGH	dB (A)	46	48	49
			MED		40	40	40
			LOW		35	35	35
			QUIET		29	29	29
		Heating	HIGH		46	48	49
			MED		40	40	40
			LOW		35	35	35
			QUIET		29	29	29
Heat exchanger type		Dimensions (H × W × D)		mm	Main1: 210 × 798 × 26.6, Main2: 135 × 798 × 20 Sub1: 84 × 798 × 13.3, Sub2: 84 × 798 × 13.3		
		Fin pitch			Main1: 1.2, Main2: 1.1 Sub1: 1.4, Sub2: 1.4		
		Rows × Stages			Main1: 2 × 10, Main2: 2 × 8 Sub1: 1 × 4, Sub2: 1 × 4		
		Pipe type			Copper		
		Fin type			Aluminum		
Enclosure		Material			Polystyrene		
		Color			White Approximate color of Munsell N 9.25/		
Dimensions (H × W × D)		Net		mm	280 × 980 × 240		
		Gross			322 × 1,078 × 346		
Weight		Net		kg	12.5		
		Gross			17		
Connection pipe		Size	Liquid	mm (in)	Ø 6.35 (Ø 1/4)		
			Gas		Ø 12.70 (Ø 1/2)		
		Method			Flare		
Drain hose		Material			PP + HDPE		
		Size		mm	Ø 13.8 (I.D.), Ø 15.8 to Ø 16.7 (O.D.)		
Operation range		Cooling		°C	18 to 32		
				%RH	80 or less		
		Heating		°C	16 to 30		
Remote control					Wireless remote controller (Option: Wired remote controller)		
International Protection rating					IPX0		

NOTES:

- Specifications are based on the following conditions:
  - Cooling: Indoor temperature of 27 °CDB/19 °CWB, and outdoor temperature of 35 °CDB/24 °CWB.
  - Heating: Indoor temperature of 20 °CDB/15 °CWB, and outdoor temperature of 7 °CDB/6 °CWB.
  - Pipe length: 7.5 m, Height difference: 0 m. (Between outdoor unit and indoor unit.)
- Protective function might work when using it outside the operation range.
- *1: Maximum operating current is the total current of the indoor unit and the outdoor unit.
- *2: Sound pressure level:
  - Measured values in manufacturer's anechoic chamber.
  - Because of the surrounding sound environment, the sound levels measured in actual installation conditions might be higher than the specified values here.

Type				Inverter heat pump		
Model name				**AOTG18KMTC**	**AOTG22KMTC**	**AOTG24KMTC**
Power supply				240 V ~ 50 Hz		
Power supply intake				Outdoor unit		
Available voltage range				198—264 V		
Starting current			A	5.6	7.4	8.9
Fan	Airflow rate	Cooling	l/s (m^3/h)	647 (2,330)	695 (2,500)	900 (3,240)
		Heating		664 (2,390)	783 (2,820)	783 (2,820)
	Type × Q'ty			Propeller fan × 1		
	Motor output		W	49		
Sound pressure level *		Cooling	dB (A)	47	49	54
		Heating		48	52	52
Sound power level			dB (A)	61	65	66
Heat exchanger type		Dimensions (H × W × D)	mm	Main1: 672 × 881 × 18.2, Main2: 672 × 851 × 18.2		
		Fin pitch		Main1: 1.3, Main2: 1.3		
		Rows × Stages		Main1: 1 × 32, Main2: 1 × 32		
		Pipe type		Copper		
		Fin type	Type (Material)	Aluminum		
			Surface treat-ment	Blue fin		
Compressor	Type × Q'ty			DC rotary × 1		
	Motor output		W	1,060		
Refrigerant		Type		R32		
		Charge	g	1,320		
Refrigerant oil		Type		RmM68AF		
		Amount	cm^3	400		
Enclosure		Material		Steel sheet		
		Color		Beige Approximate color of Munsell 10YR 7.5/1.0		
Dimensions (H × W × D)	Net		mm	716 × 820 × 315		
	Gross			776 × 961 × 450		
Weight	Net		kg	42		
	Gross			47		
Connection pipe	Size	Liquid	mm (in)	Ø 6.35 (Ø 1/4)		
		Gas		Ø 12.70 (Ø 1/2)		
	Method			Flare		
	Pre-charge length		m	15		
	Max. length			30		
	Max. height difference			25		
Operation range		Cooling	°C	-10 to 46		
		Heating		-15 to 24		
Drain hose		Material		PP		
		Size	m	Ø 13.0 (I.D.), Ø 16.0 to Ø 16.7 (O.D.)		
International protection rating				IPX4		

NOTES:

- Specifications are based on the following conditions:
  - Cooling: Indoor temperature of 27 °CDB/ 19 °CWB, and outdoor temperature of 35 °CDB/ 24 °CWB.
  - Heating: Indoor temperature of 20 °CDB/ 15 °CWB, and outdoor temperature of 7 °CDB/ 6 °CWB.
  - Pipe length: 7.5 m, Height difference: 0 m.
- Protective function might work when using it outside the operation range.
- *: Sound pressure level
  - Measured values in manufacturer's anechoic chamber.
  - Because of the surrounding sound environment, the sound levels measured in actual installation conditions might be higher than the specified values here.

Dimensions

Models: ASTG18KMTC, ASTG22KMTC, and ASTG24KMTC

Unit: mm

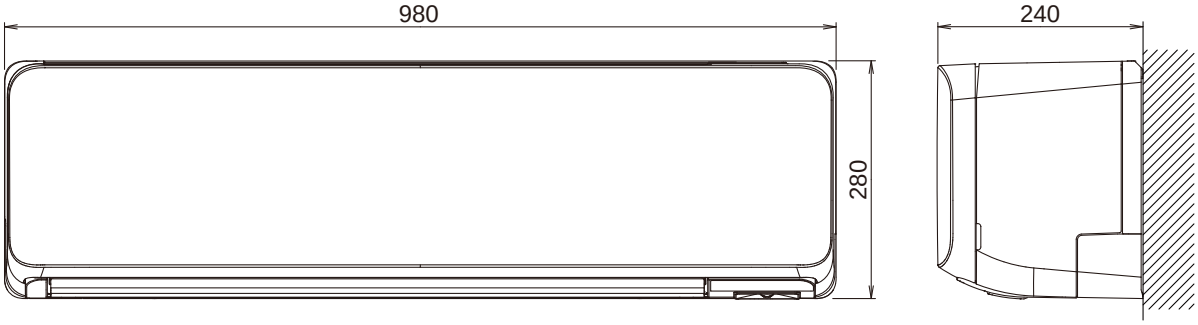

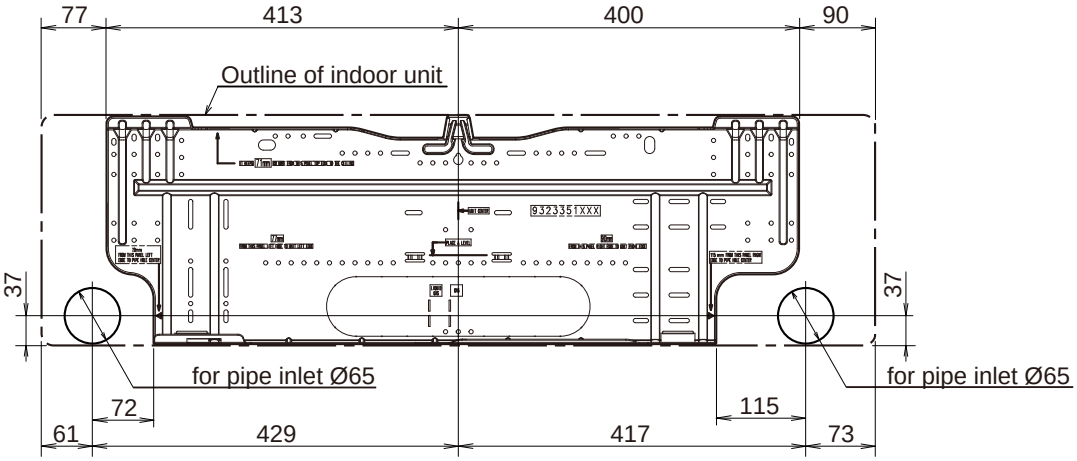

Models: AOTG18KMTC, AOTG22KMTC, and AOTG24KMTC

Unit: mm

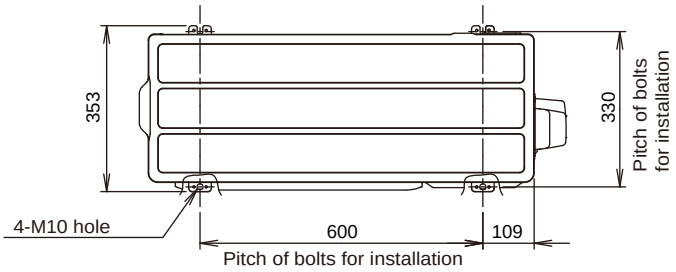

Top view

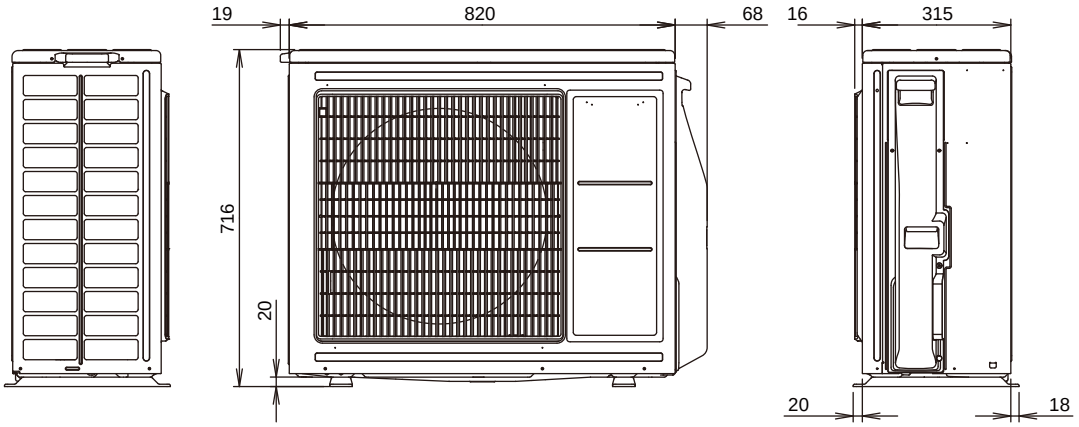

Side view

Front view

Side view

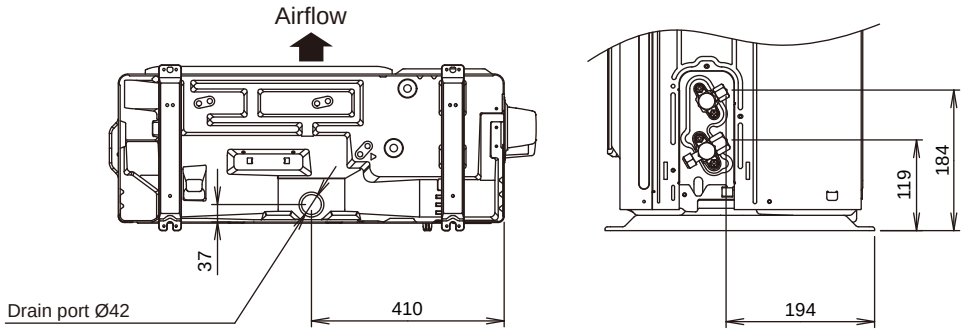

Bottom view

Side view (Valve part)

Refrigerant circuit

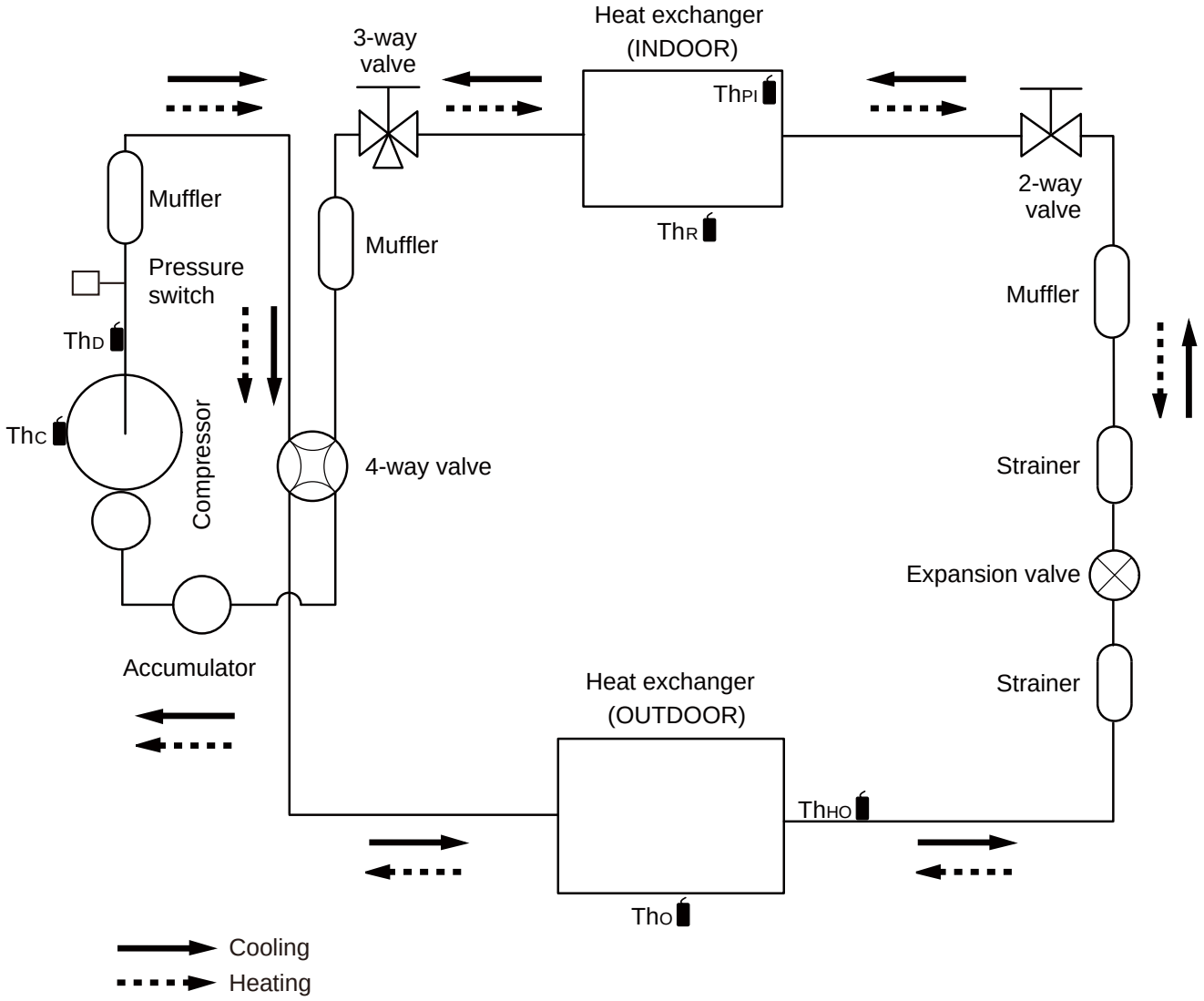

ThC : Thermistor (Compressor temperature)
ThD : Thermistor (Discharge temperature)
ThO : Thermistor (Outdoor temperature)
ThHO: Thermistor (Heat exchanger out temperature)
ThR : Thermistor (Room temperature)
ThPI : Thermistor (Pipe temperature)

PCB circuit diagram

Models : ASTG18KMTC
ASTG22KMTC
ASTG24KMTC

CN5 DC Fan motor

Pin No.	Terminal code	Function of terminal	Lead wire color
1	Vm	Motor power voltage input	Red
2	——	——	——
3	——	——	——
4	GND	GND	Black
5	Vcc	Control power voltage input	White
6	Vsp	Speed control voltage input	Yellow
7	FG	Revolution pulse output	Blue

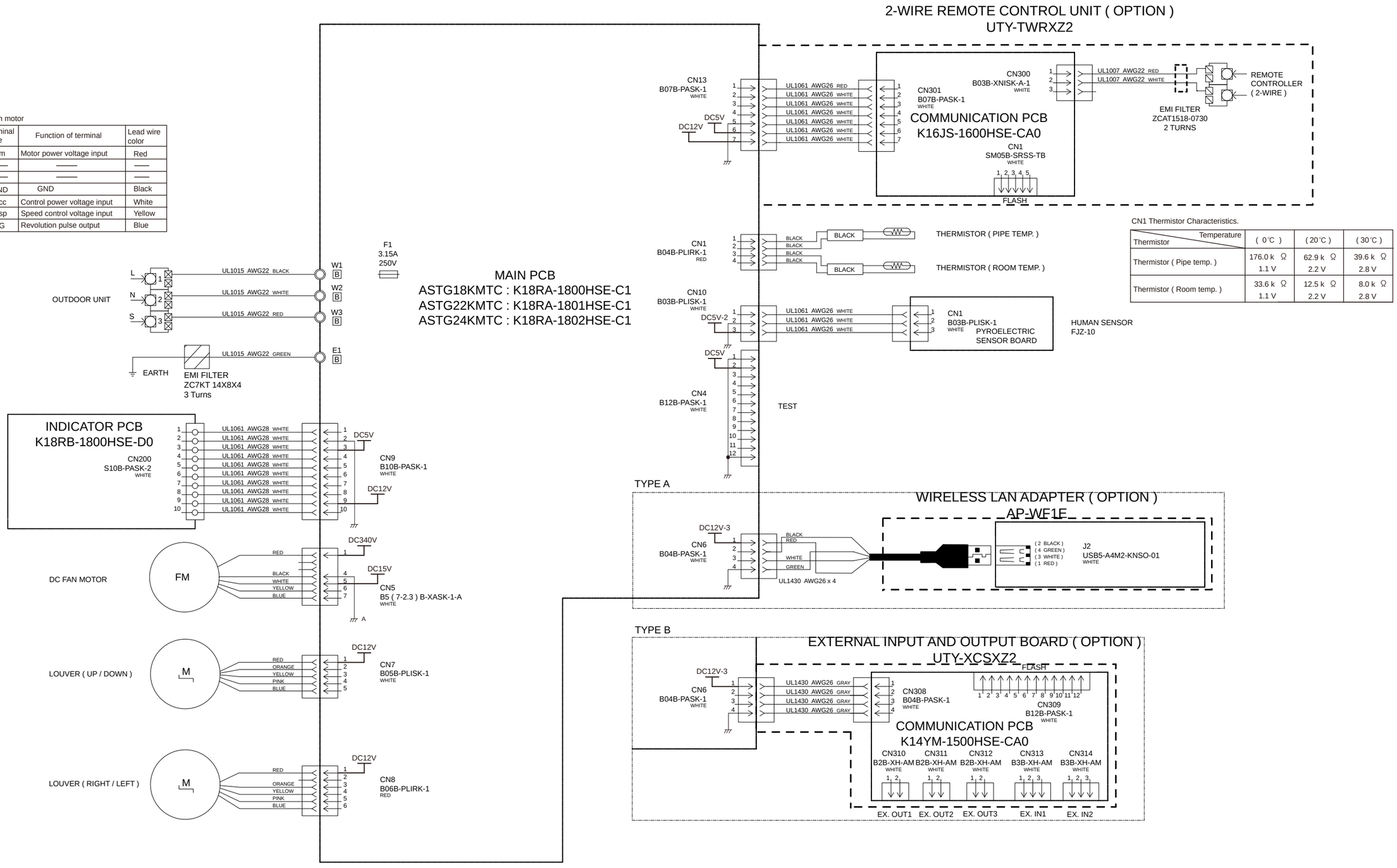

Models : AOTG18KMTC
AOTG22KMTC
AOTG24KMTC

INVERTER ASSEMBLY
AOTG18KMTC : EZ-018DHUE
AOTG22KMTC : EZ-018EHUE
AOTG24KMTC : EZ-0188HUE

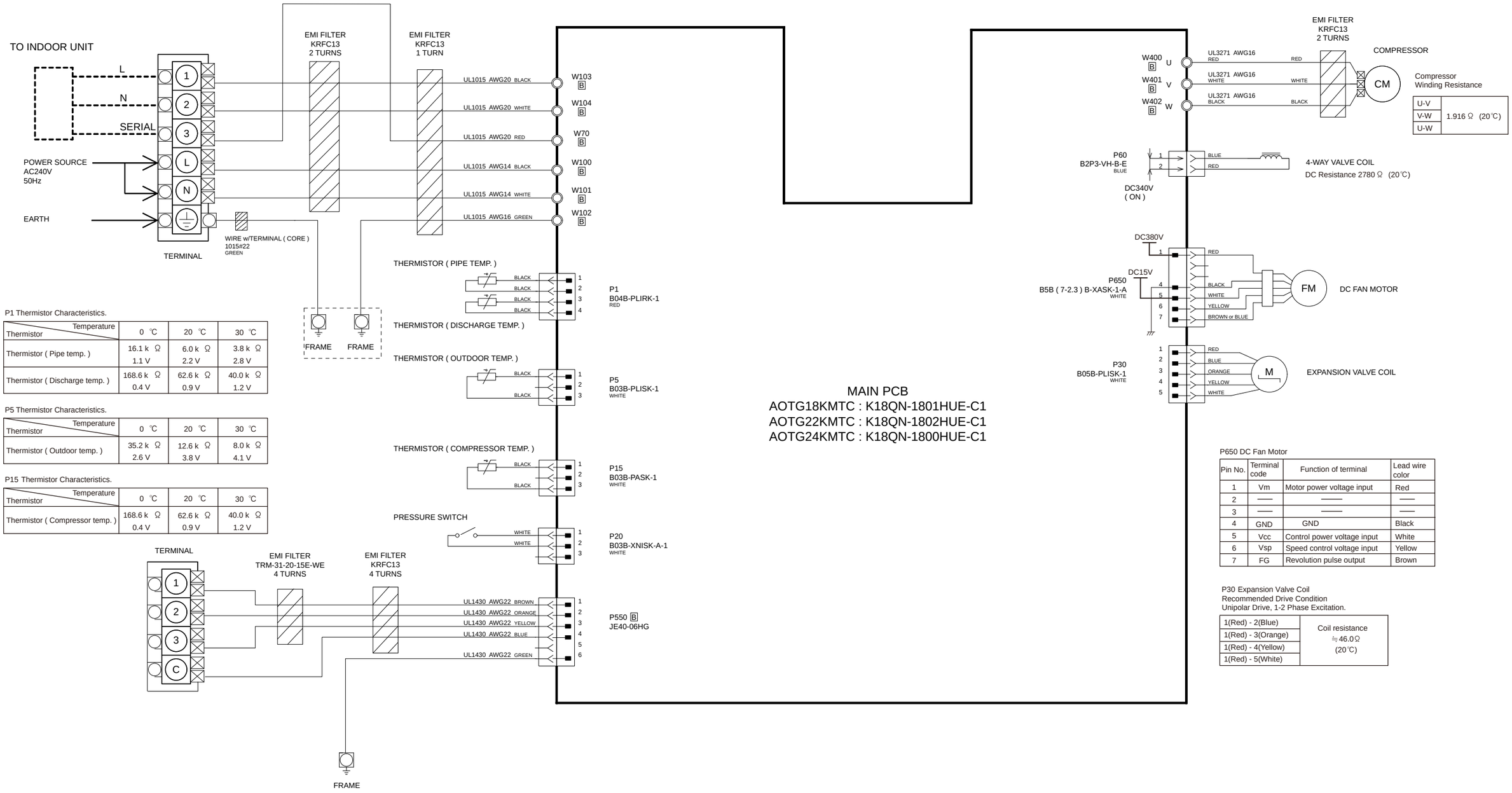

P1 Thermistor Characteristics.

Thermistor \ Temperature	0 ℃	20 ℃	30 ℃
Thermistor (Pipe temp.)	16.1 k Ω 1.1 V	6.0 k Ω 2.2 V	3.8 k Ω 2.8 V
Thermistor (Discharge temp.)	168.6 k Ω 0.4 V	62.6 k Ω 0.9 V	40.0 k Ω 1.2 V

P5 Thermistor Characteristics.

Thermistor \ Temperature	0 ℃	20 ℃	30 ℃
Thermistor (Outdoor temp.)	35.2 k Ω 2.6 V	12.6 k Ω 3.8 V	8.0 k Ω 4.1 V

P15 Thermistor Characteristics.

Thermistor \ Temperature	0 ℃	20 ℃	30 ℃
Thermistor (Compressor temp.)	168.6 k Ω 0.4 V	62.6 k Ω 0.9 V	40.0 k Ω 1.2 V

P650 DC Fan Motor

Pin No.	Terminal code	Function of terminal	Lead wire color
1	Vm	Motor power voltage input	Red
2	——	——	——
3	——	——	——
4	GND	GND	Black
5	Vcc	Control power voltage input	White
6	Vsp	Speed control voltage input	Yellow
7	FG	Revolution pulse output	Brown

P30 Expansion Valve Coil
Recommended Drive Condition
Unipolar Drive, 1-2 Phase Excitation.

1(Red) - 2(Blue)	Coil resistance ≒46.0Ω (20℃)
1(Red) - 3(Orange)	
1(Red) - 4(Yellow)	
1(Red) - 5(White)	

Error detection

If you use a wireless remote controller,
the lamp on the photo detector unit will output error codes
by way of blinking patterns.

If you use a wired remote controller,
error codes will appear on the remote control display.

Refer to the lamp blinking patterns and error codes in the table.
An error display is displayed only during operation.

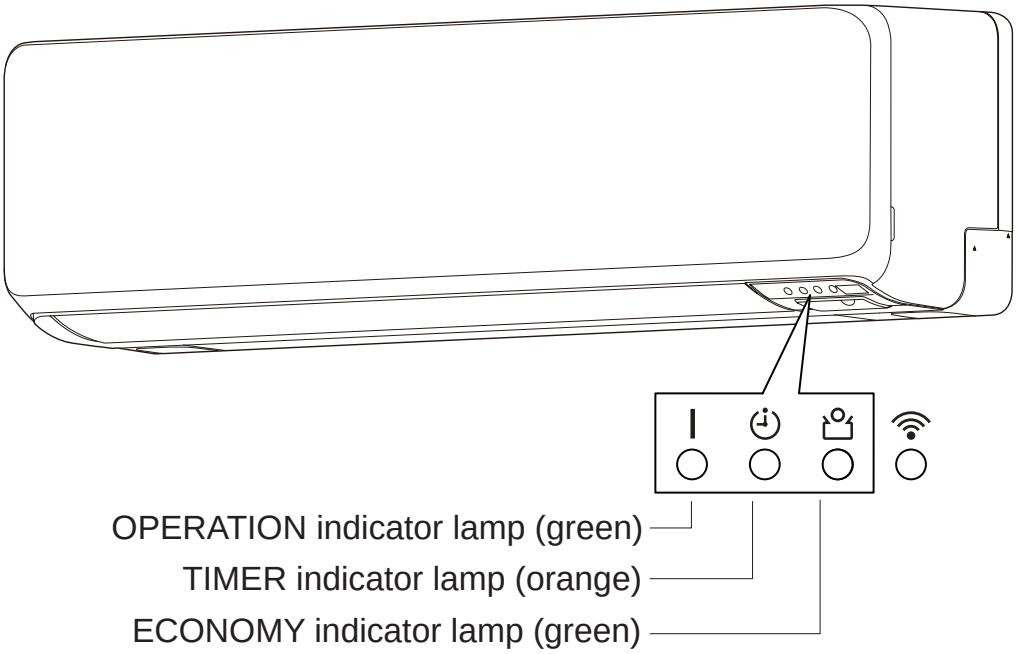

Error display			Error code	Description
OPERATION lamp (green)	TIMER lamp (orange)	ECONOMY lamp (green)		
●(1)	●(1)	◇	11	Serial communication error
●(1)	●(2)	◇	12	• Wired remote controller communication error • Server room control communication error
●(1)	●(5)	◇	15	Check run unfinished Automatic airflow adjustment error
●(1)	●(6)	◇	16	Peripheral unit transmission PCB connection error
●(1)	●(8)	◇	18	External communication error
●(2)	●(1)	◇	21	Unit number or Refrigerant circuit address setting error [Simultaneous Multi]
●(2)	●(2)	◇	22	Indoor unit capacity error
●(2)	●(3)	◇	23	Combination error
●(2)	●(4)	◇	24	• Connection unit number error (indoor secondary unit) [Simultaneous Multi] • Connection unit number error (indoor unit or branch unit) [Flexible Multi]
●(2)	●(6)	◇	26	Indoor unit address setting error
●(2)	●(7)	◇	27	Primary unit, secondary unit setup error [Simultaneous Multi]
●(2)	●(9)	◇	29	Connection unit number error in wired remote controller system
●(3)	●(1)	◇	31	Power supply interruption error
●(3)	●(2)	◇	32	Indoor unit PCB model information error
●(3)	●(3)	◇	33	Indoor unit motor electricity consumption detection error
●(3)	●(5)	◇	35	Manual auto switch error
●(3)	●(9)	◇	39	Indoor unit power supply error for fan motor
●(3)	●(10)	◇	3A	Indoor unit communication circuit (wired remote controller) error
●(4)	●(1)	◇	41	Room temp. sensor error
●(4)	●(2)	◇	42	Indoor unit heat ex. middle temp. sensor error
●(4)	●(4)	◇	44	Human sensor error
●(5)	●(1)	◇	51	Indoor unit fan motor error
●(5)	●(3)	◇	53	Drain pump error
●(5)	●(4)	◇	54	Electric air cleaner reverse VDD error
●(5)	●(5)	◇	55	Filter set error
●(5)	●(7)	◇	57	Damper error
●(5)	●(8)	◇	58	Intake grille error
●(5)	●(9)	◇	59	Indoor unit fan motor 2 error (Left side fan)
●(5)	●(10)	◇	5A	Indoor unit fan motor 3 error (Right side fan)

Error display			Error code	Description
OPERATION lamp (green)	TIMER lamp (orange)	ECONOMY lamp (green)		
●(5)	●(15)	◇	5U	Indoor unit error
●(6)	●(1)	◇	61	Outdoor unit reverse/missing phase and wiring error
●(6)	●(2)	◇	62	Outdoor unit main PCB model information error or communication error
●(6)	●(3)	◇	63	Inverter error
●(6)	●(4)	◇	64	Active filter error, PFC circuit error
●(6)	●(5)	◇	65	Trip terminal L error
●(6)	●(8)	◇	68	Outdoor unit rush current limiting resister temp. rise error
●(6)	●(10)	◇	6A	Display PCB microcomputers communication error
●(7)	●(1)	◇	71	Discharge temp. sensor error
●(7)	●(2)	◇	72	Compressor temp. sensor error
●(7)	●(3)	◇	73	Outdoor unit Heat Ex. liquid temp. sensor error
●(7)	●(4)	◇	74	Outdoor temp. sensor error
●(7)	●(5)	◇	75	Suction Gas temp. sensor error
●(7)	●(6)	◇	76	• 2-way valve temp. sensor error • 3-way valve temp. sensor error
●(7)	●(7)	◇	77	Heat sink temp. sensor error
●(8)	●(2)	◇	82	• Sub-cool Heat Ex. gas inlet temp. sensor error • Sub-cool Heat Ex. gas outlet temp. sensor error
●(8)	●(3)	◇	83	Liquid pipe temp. sensor error
●(8)	●(4)	◇	84	Current sensor error
●(8)	●(6)	◇	86	• Discharge pressure sensor error • Suction pressure sensor error • High pressure switch error
●(9)	●(4)	◇	94	Trip detection
●(9)	●(5)	◇	95	Compressor rotor position detection error (permanent stop)
●(9)	●(7)	◇	97	Outdoor unit fan motor 1 error
●(9)	●(8)	◇	98	Outdoor unit fan motor 2 error
●(9)	●(9)	◇	99	4-way valve error
●(9)	●(10)	◇	9A	Coil (expansion valve) error
●(10)	●(1)	◇	A1	Discharge temp. error
●(10)	●(3)	◇	A3	Compressor temp. error
●(10)	●(4)	◇	A4	High pressure error
●(10)	●(5)	◇	A5	Low pressure error
●(13)	●(2)	◇	J2	Branch boxes error [Flexible Multi]

Display mode ● : 0.5s ON / 0.5s OFF
◇ : 0.1s ON / 0.1s OFF
( ) : Number of flashing

PARTS

INDOOR UNIT
ASTG18KMTC
ASTG22KMTC
ASTG24KMTC

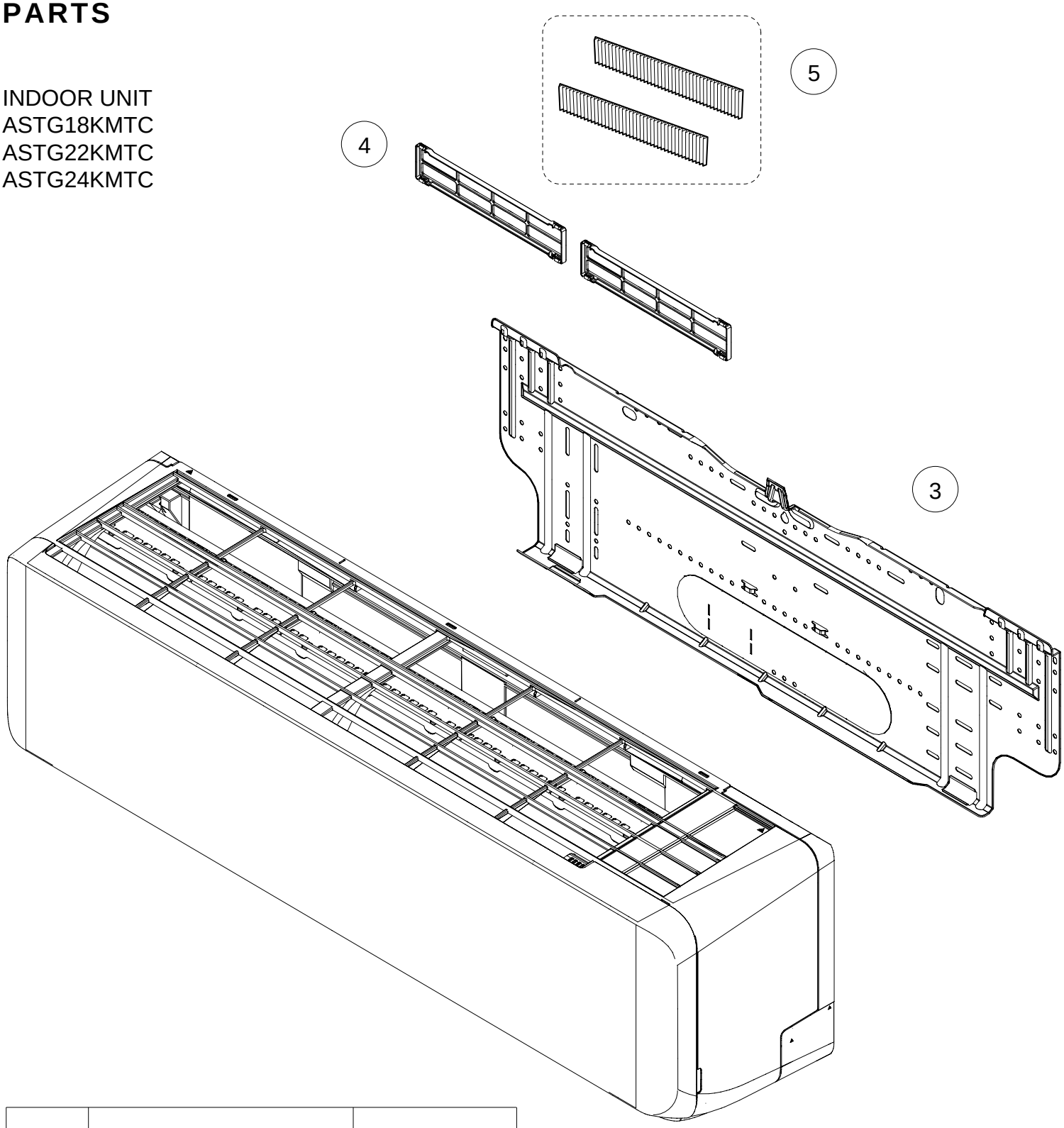

Ref.	Description	Part number
1	Remote control (FUJITSU)	9332438628
2	Remote control holder	9318912005
3	Bracket panel	9323351004
4	Electric filter holder	9332911008
5	Air clean filter assy	9317250009

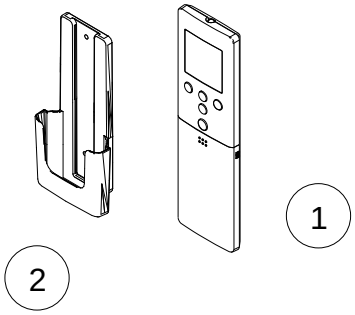

INDOOR UNIT
ASTG18KMTC
ASTG22KMTC
ASTG24KMTC

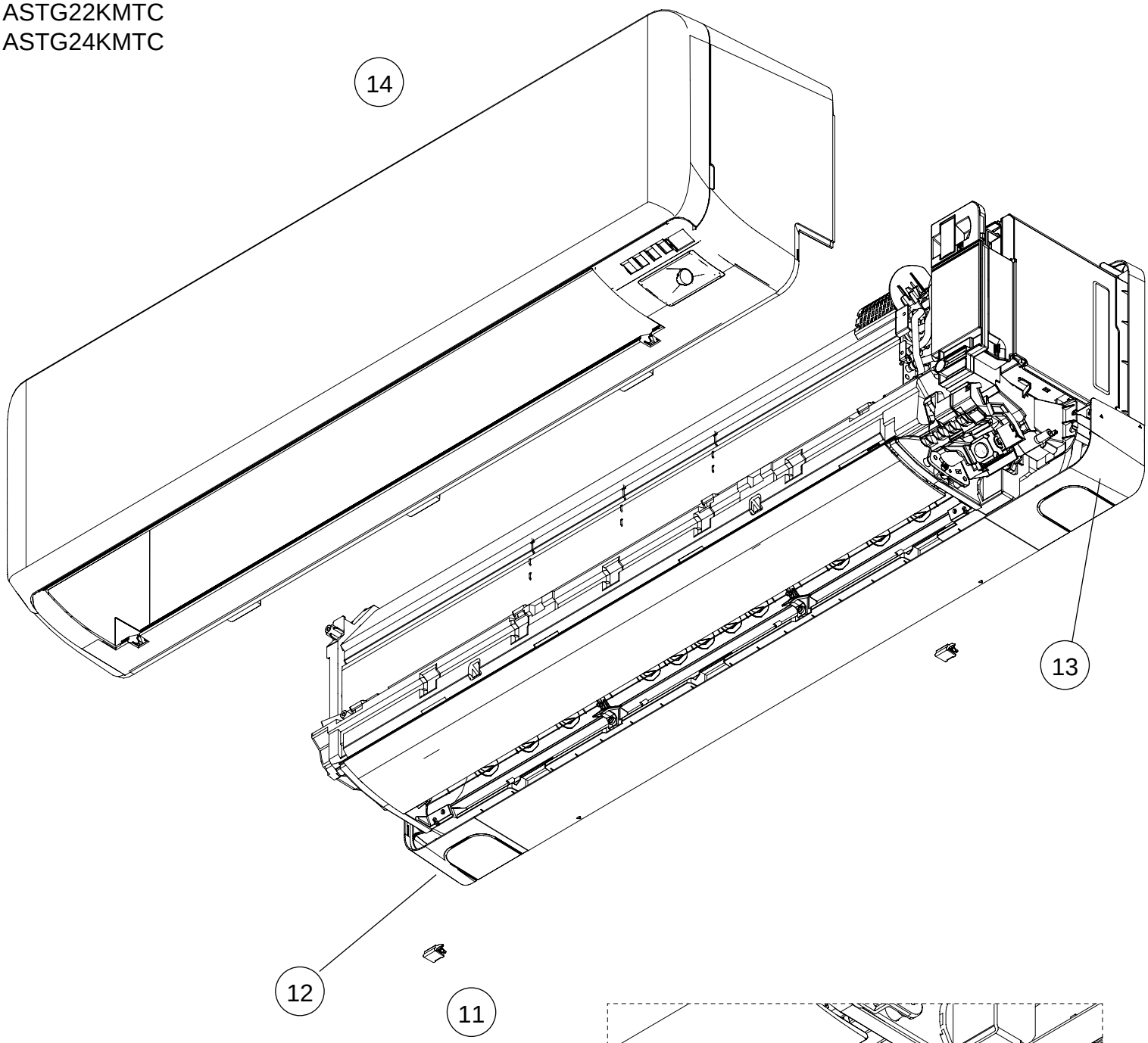

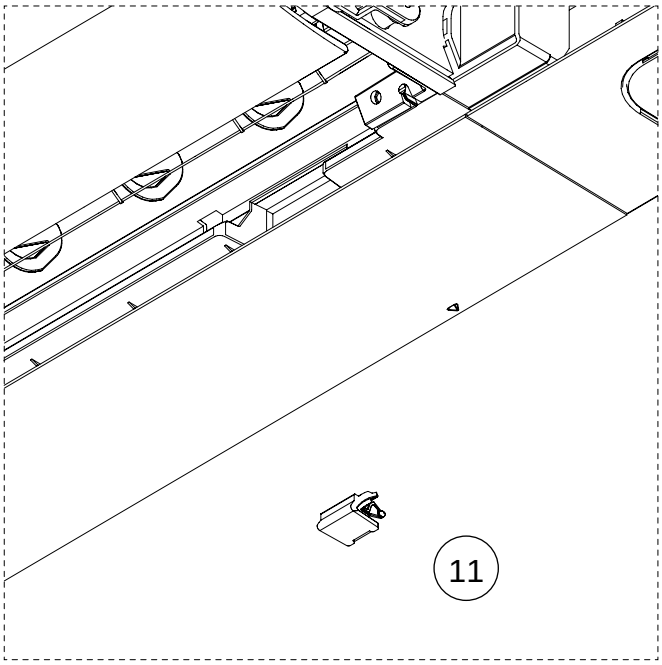

Ref.	Description	Part number
11	Screw cap	9387476002
12	Under cover L	9323341005
13	Under cover R	9323342002
14	Front panel total assy	9387596106

INDOOR UNIT
ASTG18KMTC
ASTG22KMTC
ASTG24KMTC

Front panel total assy

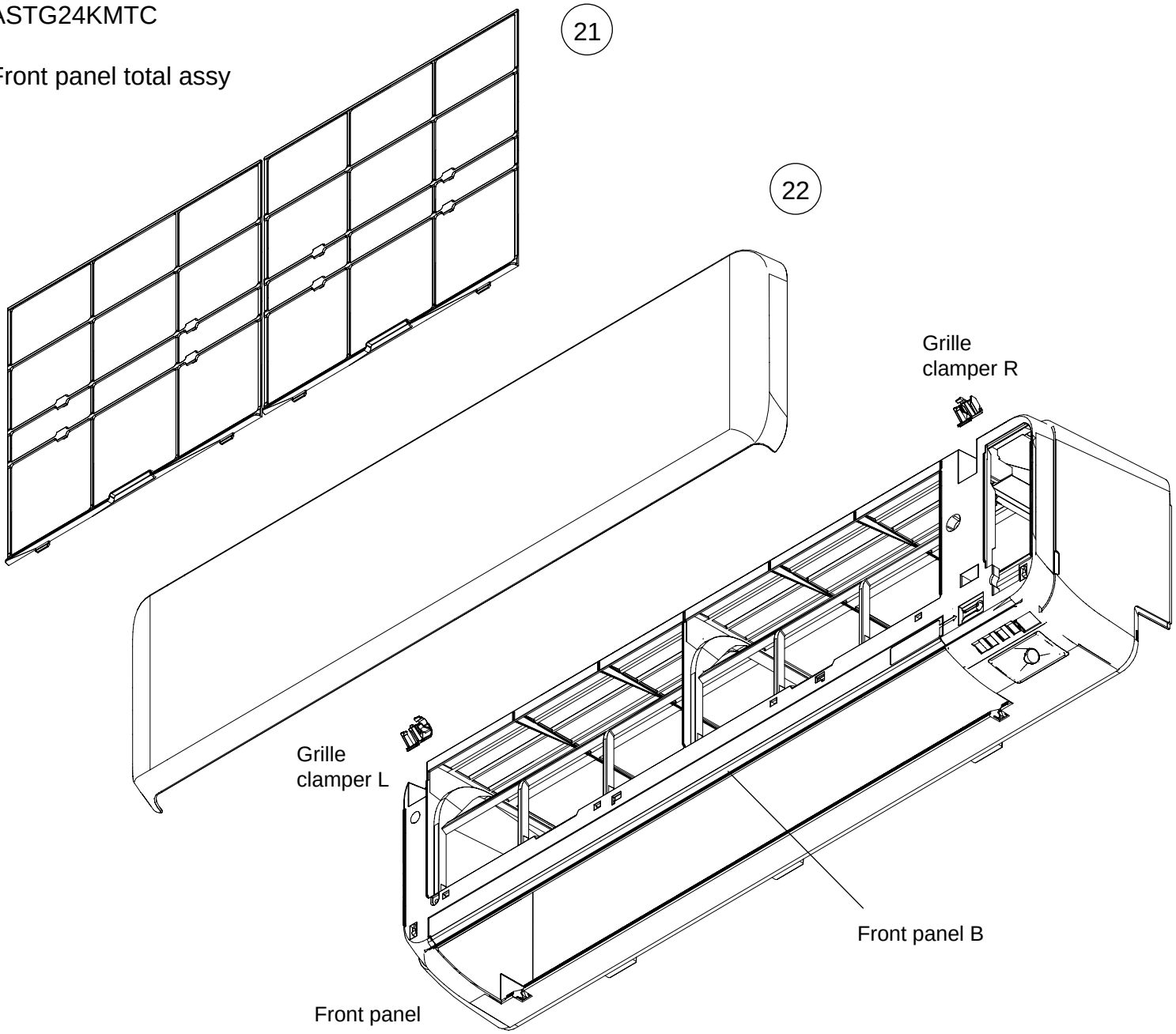

Ref.	Description	Part number
21	Air filter	9323340008
22	Intake grille assy (FUJITSU)	9387756067

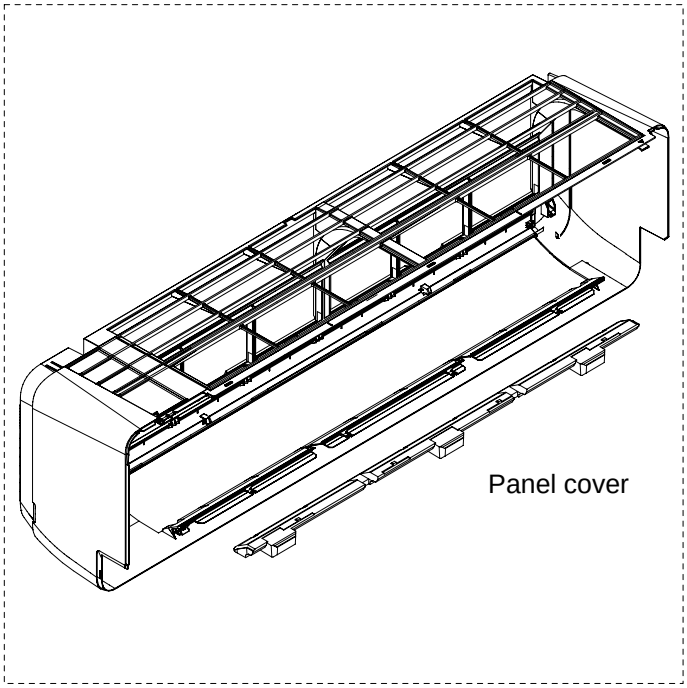

INDOOR UNIT
ASTG18KMTC
ASTG22KMTC
ASTG24KMTC

Ref.	Description	Part number
31	U/D louver assy	9387479010
32	Louver spring	9383730023

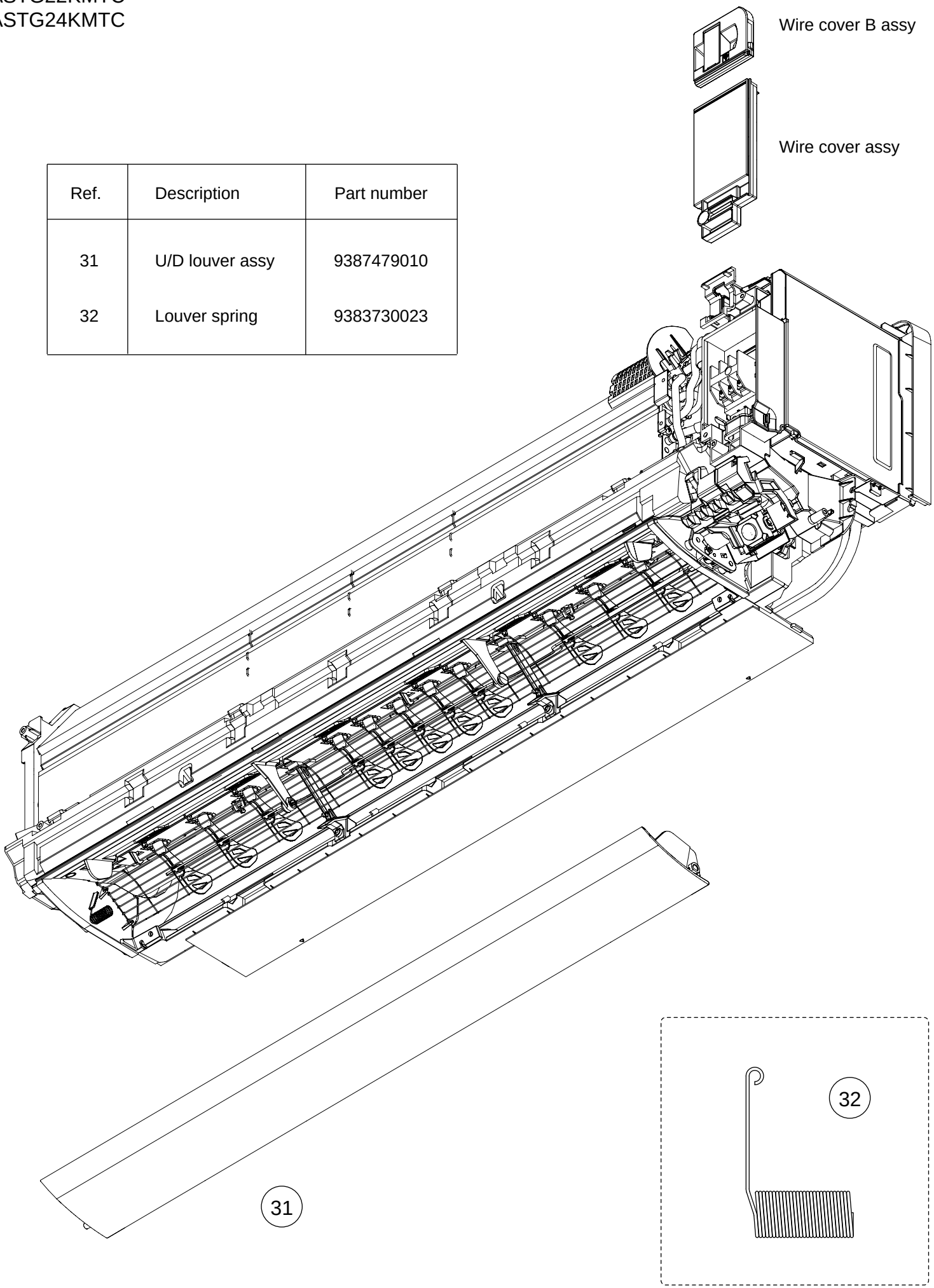

INDOOR UNIT
ASTG18KMTC
ASTG22KMTC
ASTG24KMTC

Control box

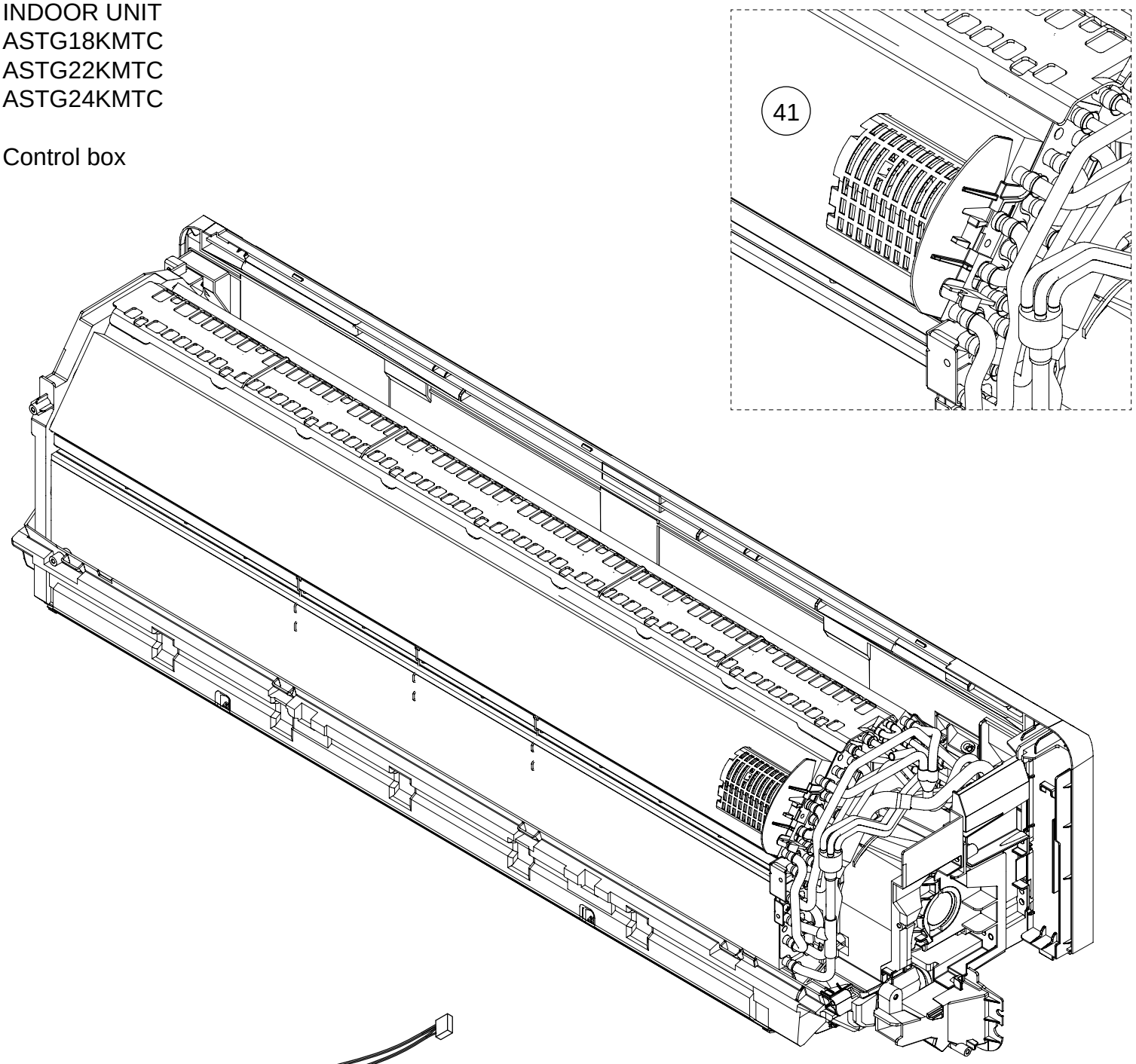

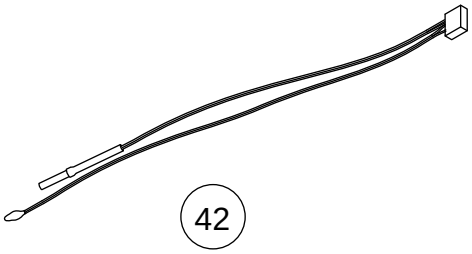

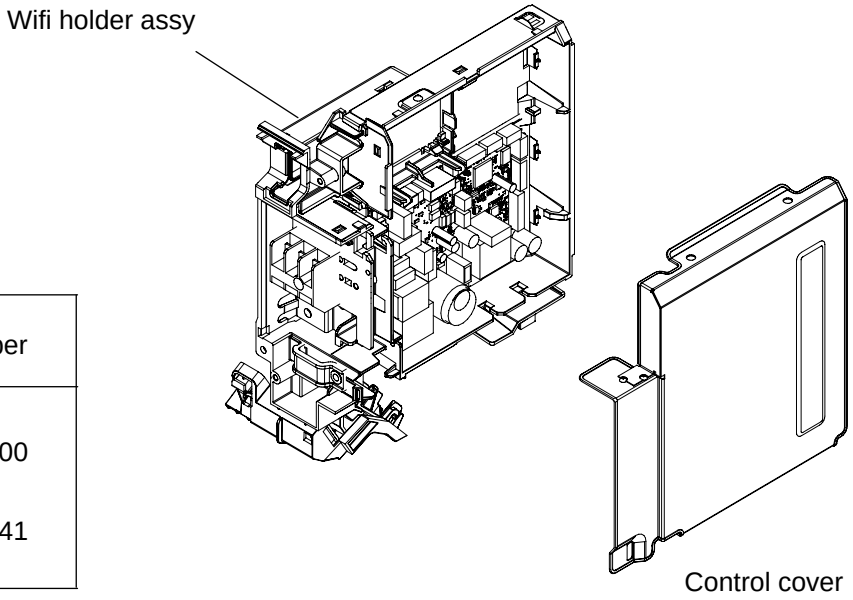

Ref.	Description	Part number
41	Room thermistor holder	9387467000
42	Thermistor assy	9900627041

INDOOR UNIT
ASTG18KMTC
ASTG22KMTC
ASTG24KMTC

Control box

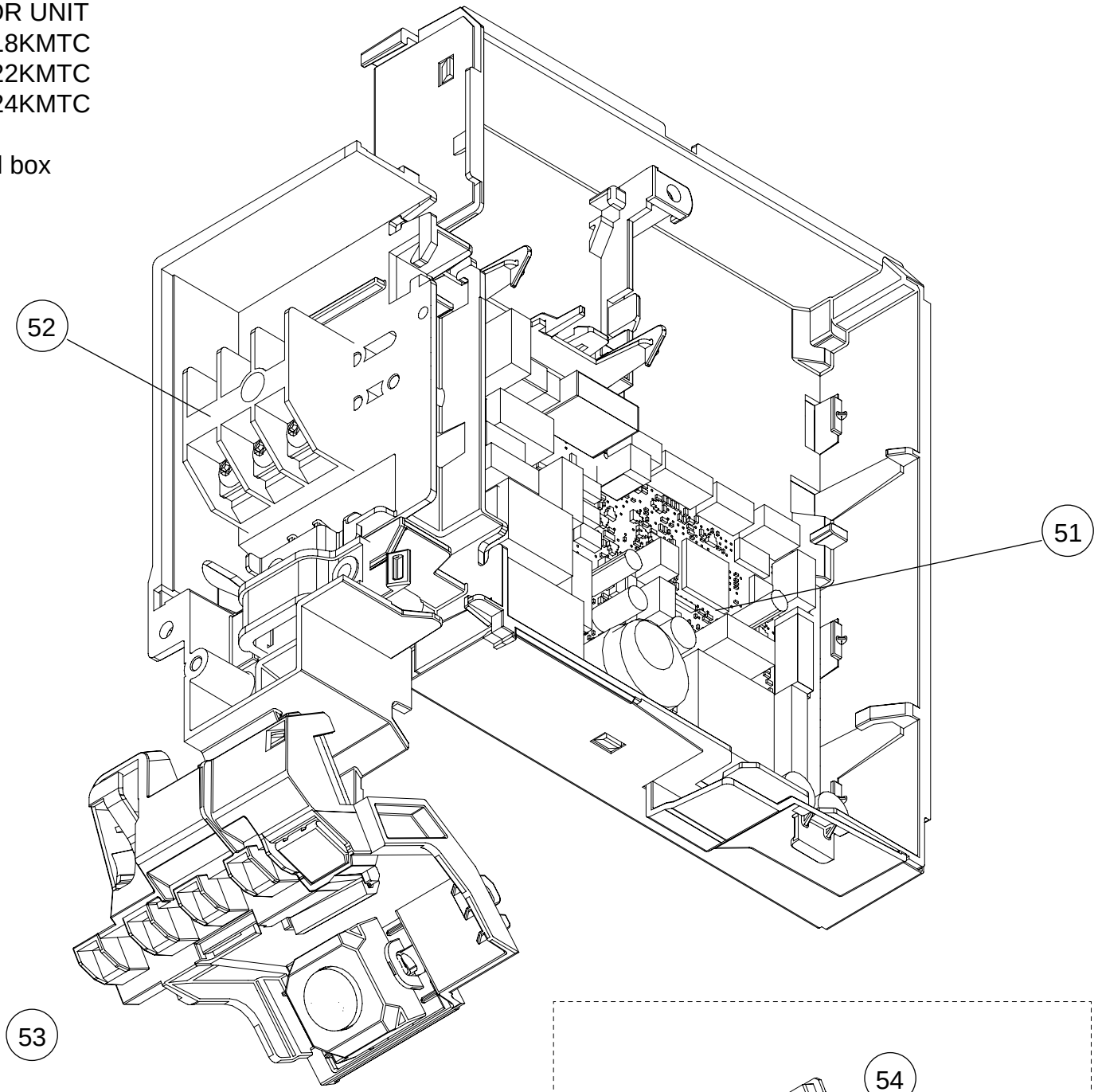

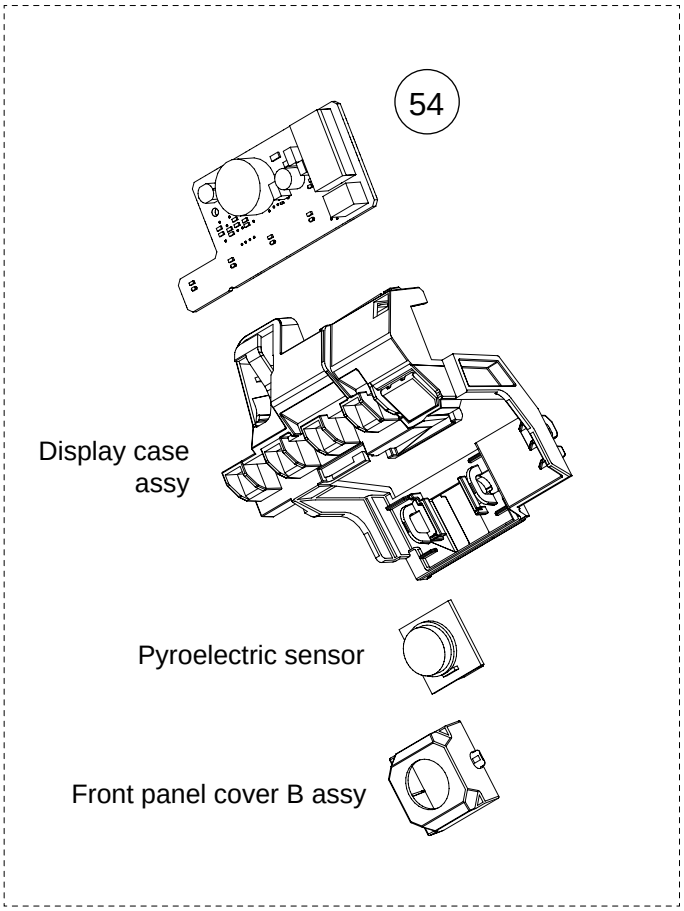

Ref.	Description	Part number
51	Main PCB (ASTG18)	9711141019
51	Main PCB (ASTG22)	9711141026
51	Main PCB (ASTG24)	9711141033
52	Terminal	9306489045
53	Display assy	9711146014
54	Indicator PCB	9711147011

INDOOR UNIT
ASTG18KMTC
ASTG22KMTC
ASTG24KMTC

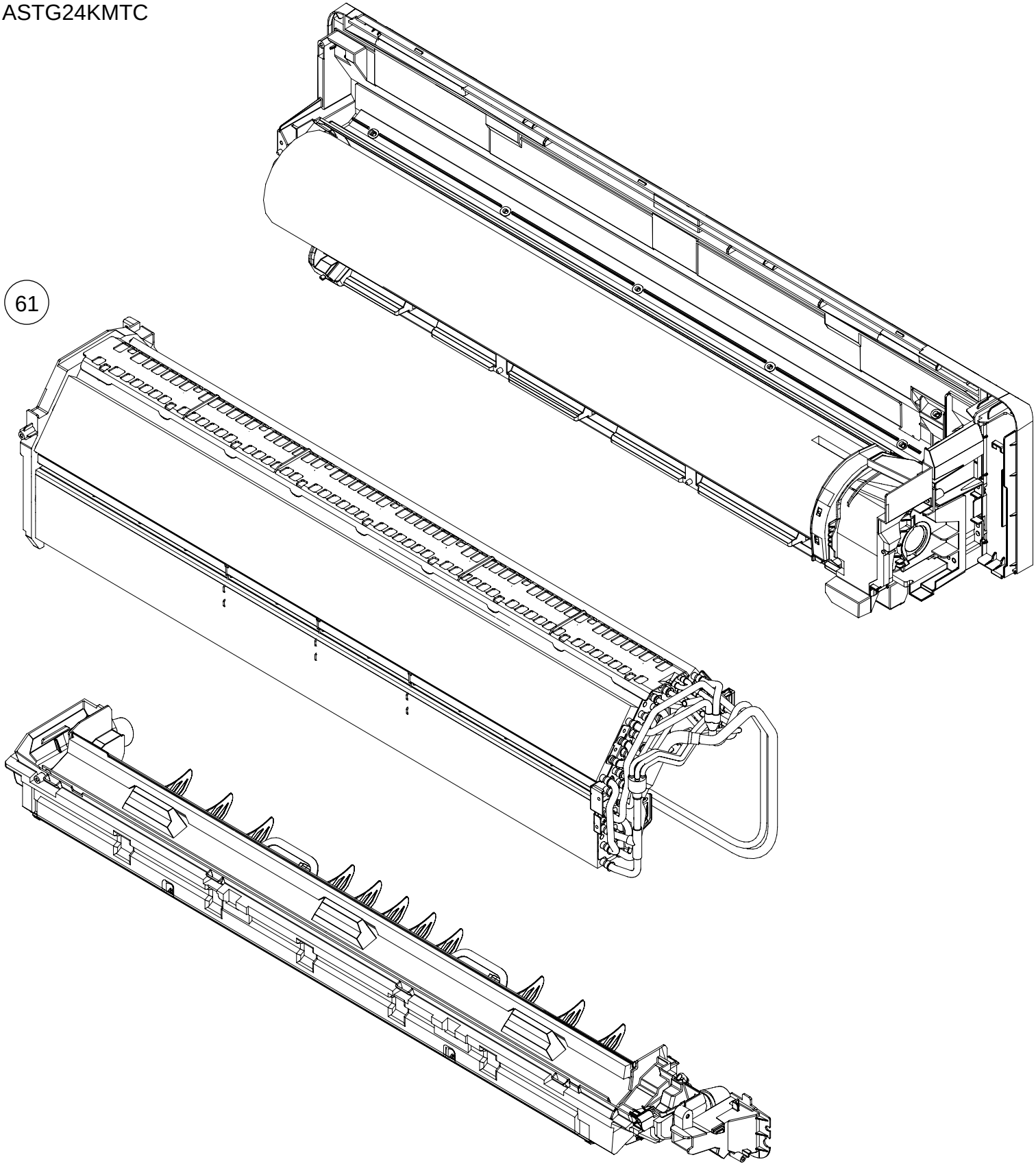

Ref.	Description	Part number
61	Evaporator total assy	9383735011

INDOOR UNIT
ASTG18KMTC
ASTG22KMTC
ASTG24KMTC

Base total assy
Motor cover assy
Fan motor

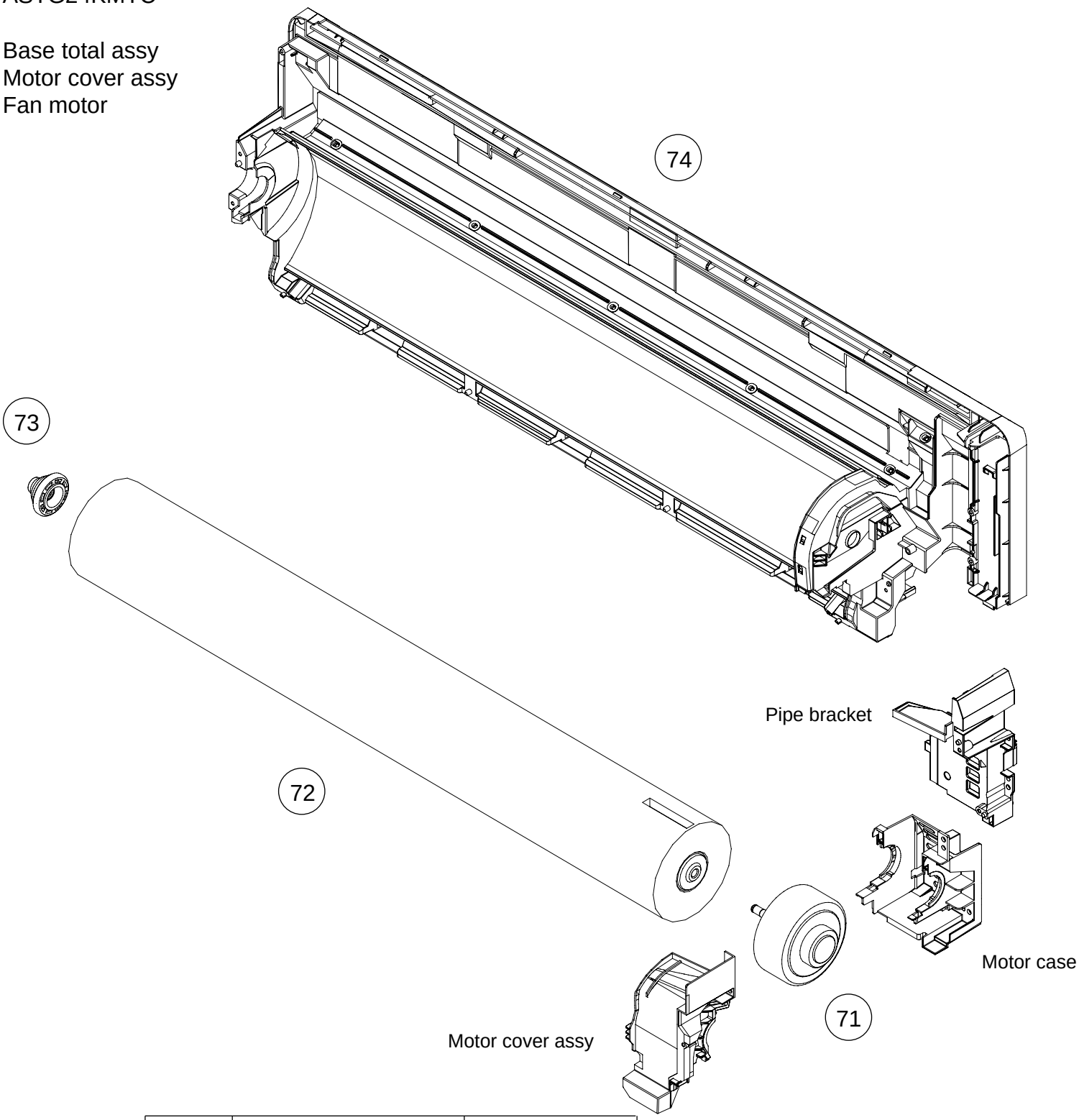

Ref.	Description	Part number
71	Brushless motor	9603631000
72	Crossflow fan assy	9387055030
73	Bearing D assy	9333628004
74	Base assy	9387587081

INDOOR UNIT
ASTG18KMTC
ASTG22KMTC
ASTG24KMTC

Drain pan total assy

Cable guide

83

84

85

Spacer K assy

Gear case assy

81

R and L louver SPM assy

82

Ref.	Description	Part number
81	Stepping motor	9901011016
82	Stepping motor	9901011023
---	Drain pan total assy	9387591071
83	Drain pan assy	9387591019
84	Drain cap	9316177017
85	Drain hose assy	9316904002

PARTS

OUTDOOR UNIT
AOTG18KMTC
AOTG22KMTC
AOTG24KMTC

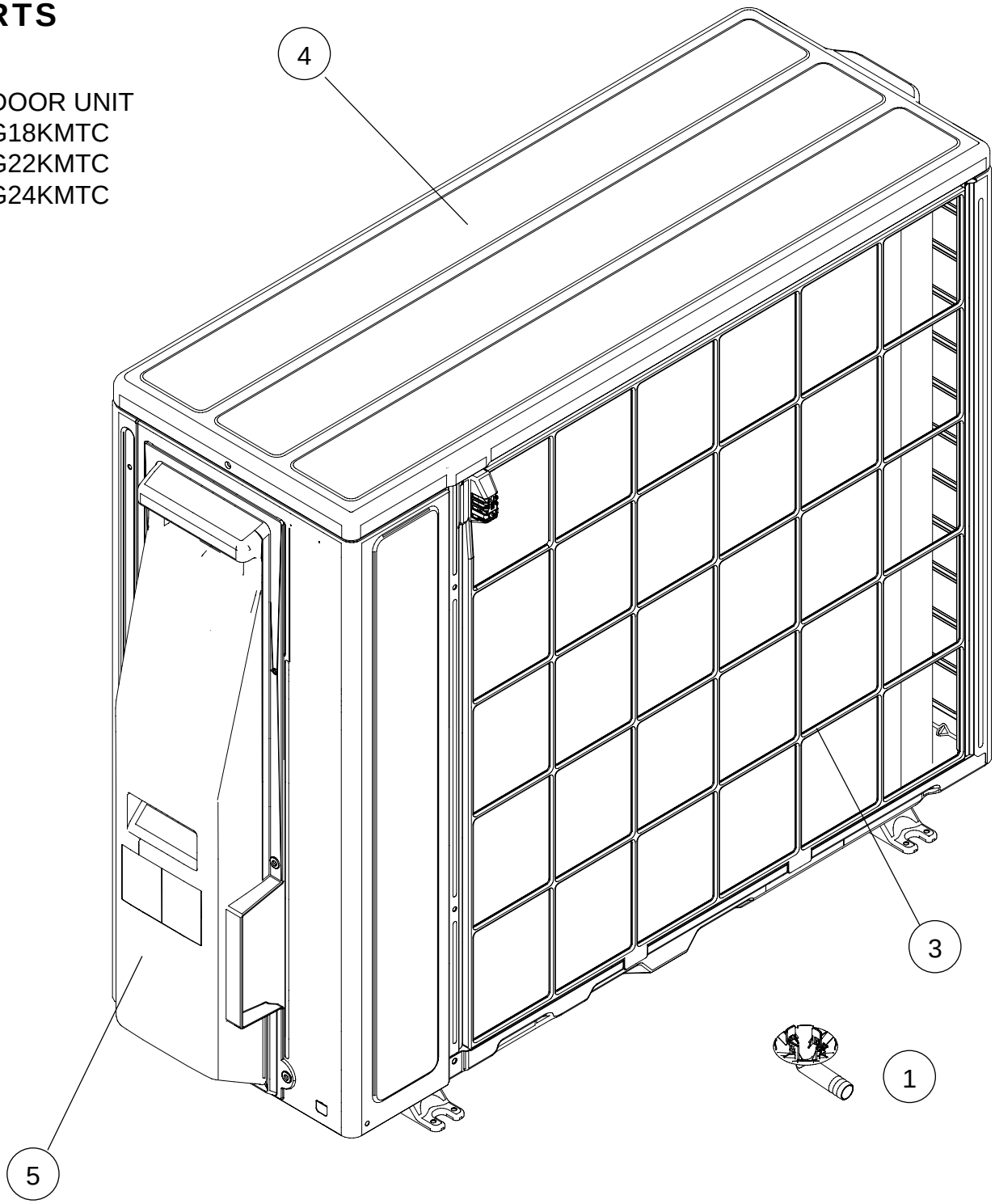

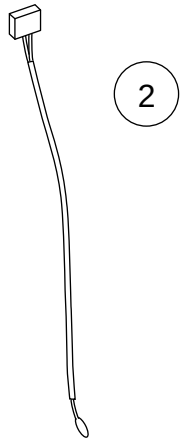

Ref.	Description	Part number
1	Drain pipe	9322144003
2	Outdoor thermistor	9900565060
3	Protective net assy	9322811042
4	Top panel assy	9322556073
5	Switch cover assy	9322570048

OUTDOOR UNIT
AOTG18KMTC
AOTG22KMTC
AOTG24KMTC

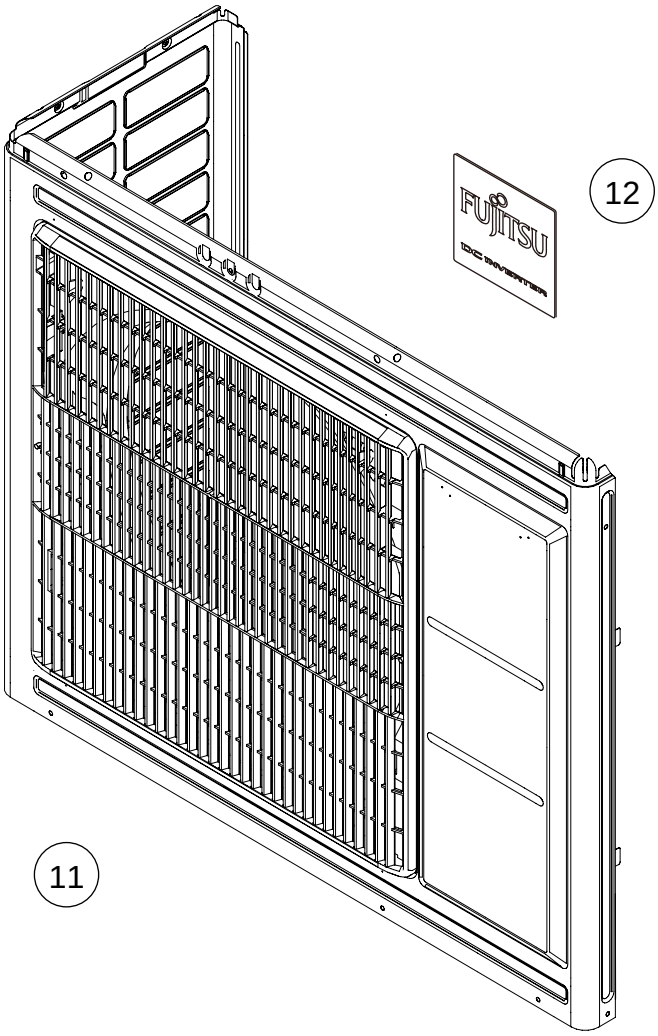

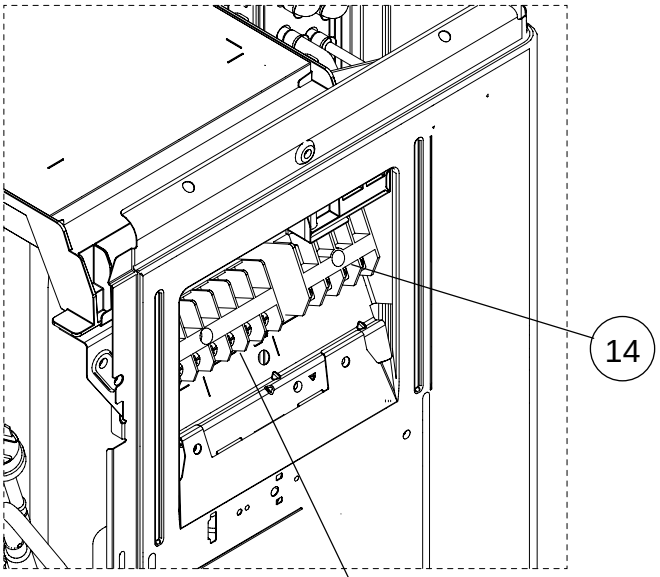

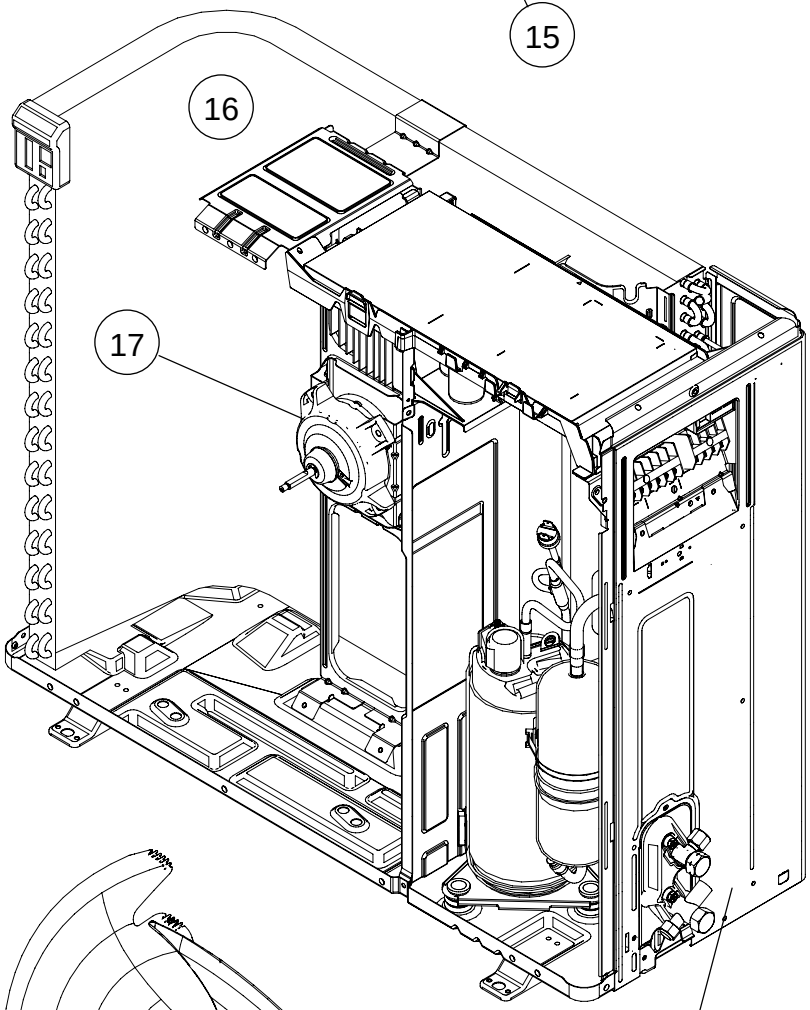

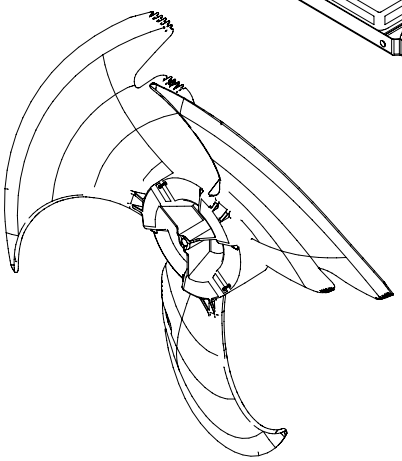

Ref.	Description	Part number
11	Front panel assy	9322555038
12	Emblem	9319151007
13	Cabinet right assy	9322552143
14	Terminal	9306488123
15	Terminal	9900435028
16	Motor bracket assy	9322553034
17	Brushless motor	9603601003
18	Propeller fan	9322150004

OUTDOOR UNIT
AOTG18KMTC
AOTG22KMTC
AOTG24KMTC

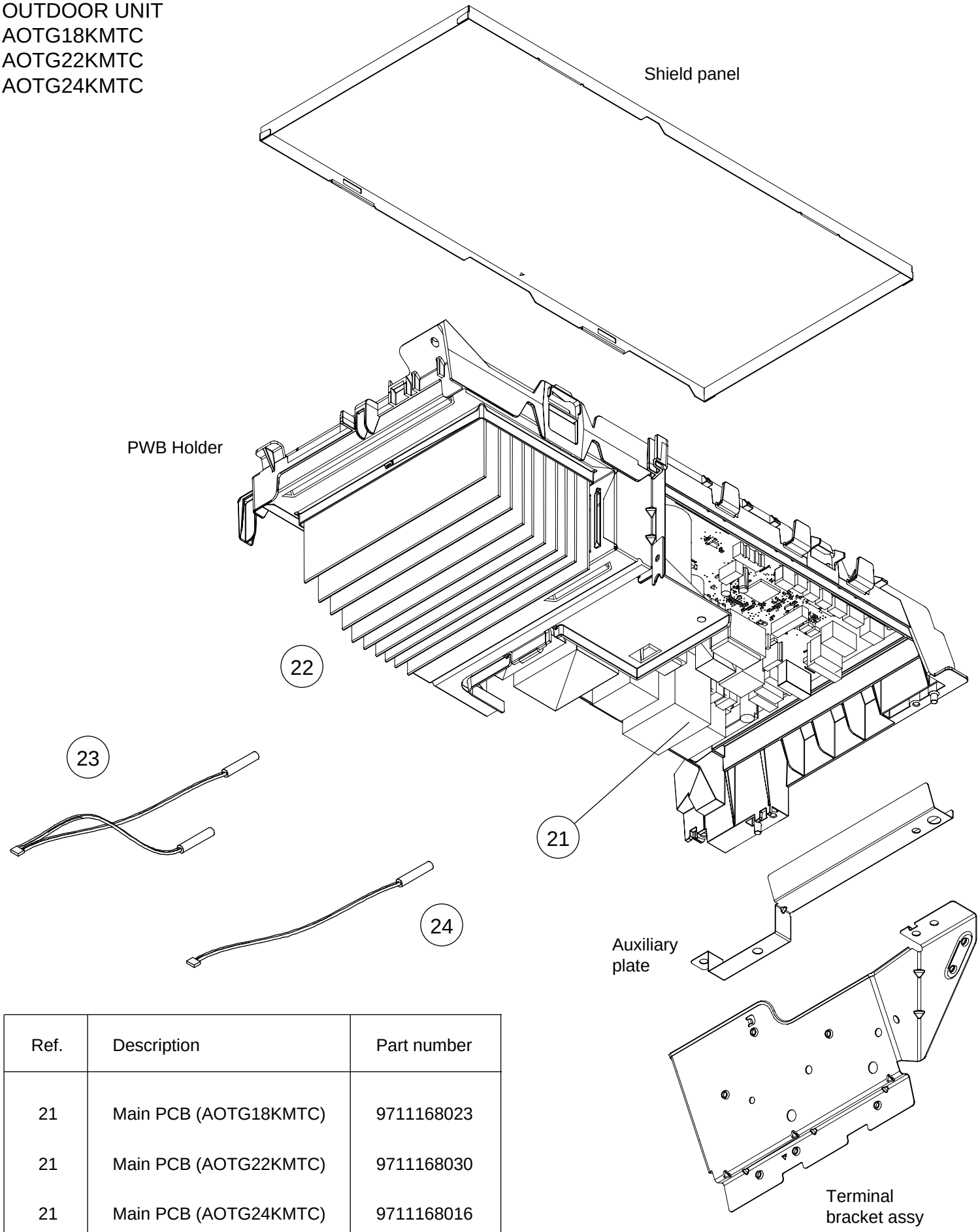

Ref.	Description	Part number
21	Main PCB (AOTG18KMTC)	9711168023
21	Main PCB (AOTG22KMTC)	9711168030
21	Main PCB (AOTG24KMTC)	9711168016
22	Heatsink	9322421043
23	Thermistor assy	9900727116
24	Compressor thermistor	9900985011

OUTDOOR UNIT
AOTG18KMTC
AOTG22KMTC
AOTG24KMTC

Ref.	Description	Part number
31	Condenser total assy	9317089685
-	S-insulator B	9322503008
-	S-insulator F	9322529008
-	S-insulator H	9322501004
-	S-insulator V	9323045002
-	S-insulator K	9322824004

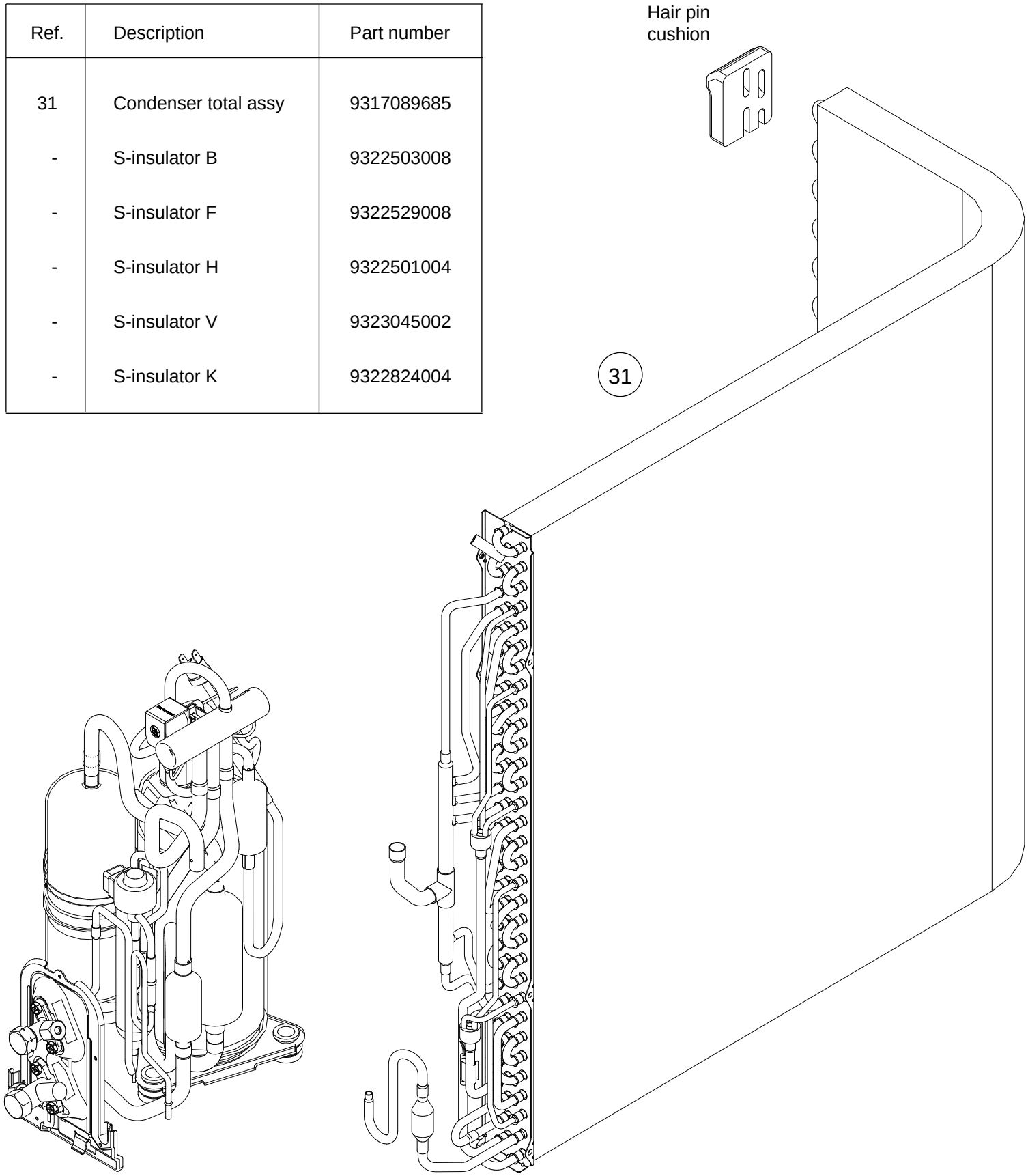

OUTDOOR UNIT
AOTG18KMTC
AOTG22KMTC
AOTG24KMTC

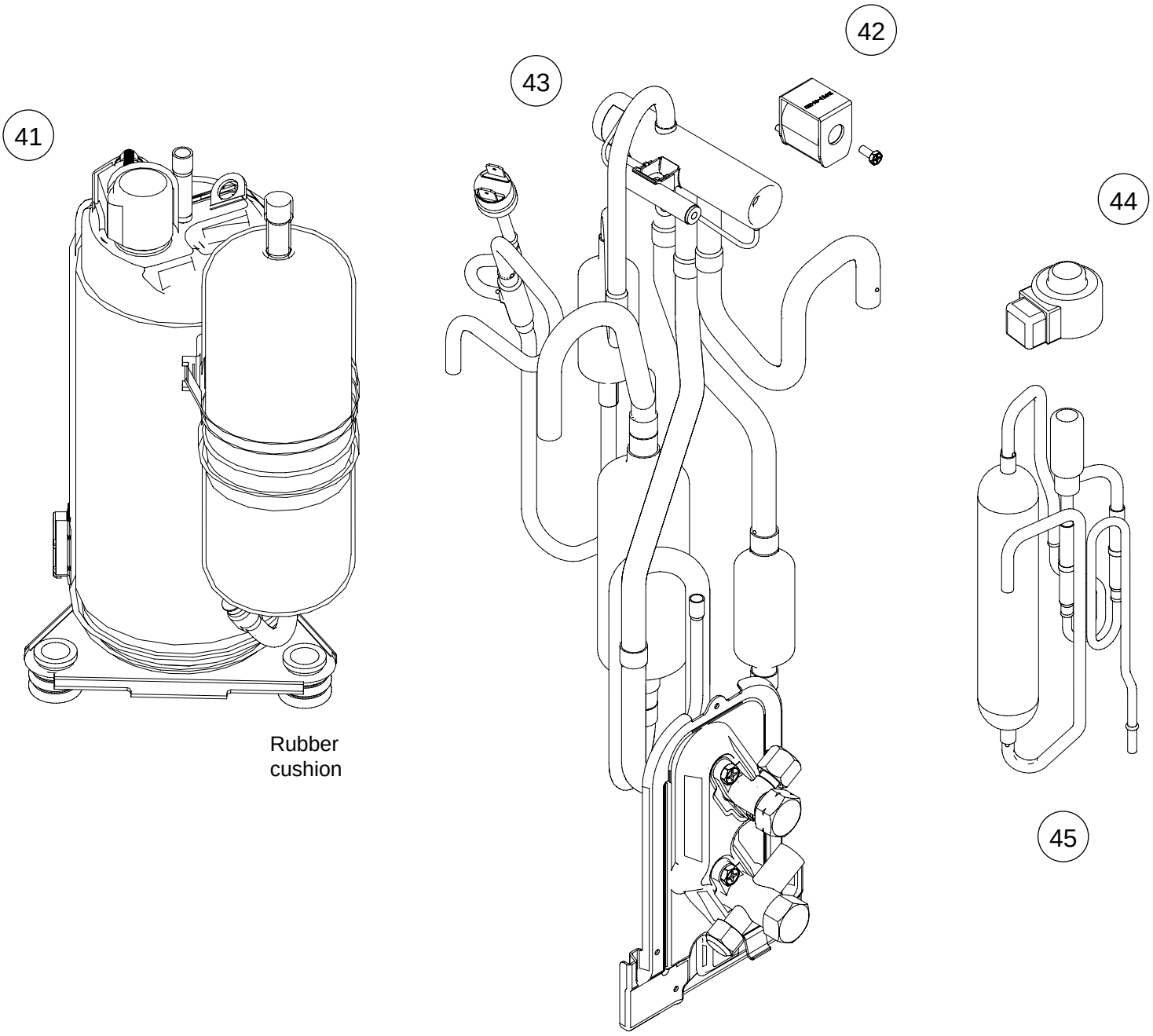

Ref.	Description	Part number
41	Compressor	9810521002
42	Solenoid	9970206009
43	4-way valve assy	9383948008
44	Expansion valve coil	9970173028
45	Pulse motor valve assy	9322462015

Accessories

Models: ASTG18KMTC, ASTG22KMTC, and ASTG24KMTC

Part name	Exterior	Q'ty	Part name	Exterior	Q'ty
Operating manual		1	Tapping screw (large)		5
Installation manual		1	Tapping screw (small)		2
Remote controller		1	Battery		2
Remote controller holder		1	Filter holder		2
Cloth tape		1	Air cleaning filters		1
Wall hook bracket		1			

Optional parts

Controllers

Exterior	Part name	Model name	Summary
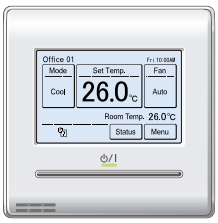	Wired remote controller	UTY-RNRYZ*	Easy finger touch operation with LCD panel. Backlit LCD enables easy operation in a dark room. Wire type: Non-polar 2-wire Optional communication kit is necessary for installation.
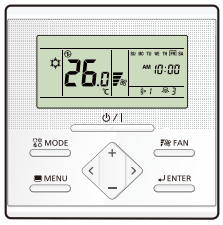	Wired remote controller	UTY-RLRY	High visibility and easy operation. Room temperature can be accurately controlled using the built-in thermo sensor. Wire type: Non-polar 2-wire Optional communication kit is necessary for installation.
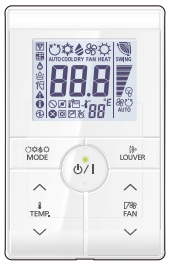	Simple remote controller	UTY-RSRY	Compact remote controller concentrates on the basic functions such as Start/Stop, fan control, temperature setting, and operation mode. Wire type: Non-polar 2-wire Optional communication kit is necessary for installation.
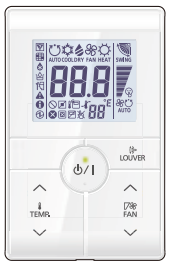	Simple remote controller	UTY-RHRY	Compact remote controller concentrates on the basic functions such as Start/Stop, fan control, and temperature setting. Wire type: Non-polar 2-wire Optional communication kit is necessary for installation.

NOTES:

- Available functions may differ by the remote controller. For details, refer to the operation manual.
- In this product, group controlling system of the wired remote controller is prohibited.

Others

Exterior	Part name	Model name	Summary
	External connect kit	UTY-XWZXZ5	Required when external device is connected. Optional communication kit is necessary for installation.
	External input and output PCB	UTY-XCSXZ2	Use to connect with external devices and air conditioner PCB.
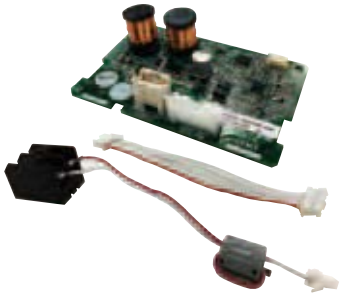	Communication kit	UTY-TWRXZ2	Use to connect Non-polar 2-core wired remote controller.

Accessories

Models: AOTG18KMTC, AOTG22KMTC, and AOTG24KMTC

Part name	Exterior	Q’ty	Part name	Exterior	Q’ty
Installation manual		1	Drain pipe		1

1903G4811