FUJITSU

SPLIT TYPE
ROOM AIR CONDITIONER
WALL MOUNTED TYPE

SERVICE MANUAL

Refrigerant
R410A

Indoor unit	Outdoor unit
ASTG09LVCC	AOTG09LVCC
ASTG12LVCC	AOTG12LVCC

CONTENTS

SPECIFICATIONS 1
DIMENSIONS 2
REFRIGERANT SYSTEM DIAGRAM 4
CIRCUIT DIAGRAM 5
INDOOR PCB CIRCUIT DIAGRAM 6
OUTDOOR PCB CIRCUIT DIAGRAM . . . 10
ERROR DETECTION 13
PARTS (INDOOR UNIT) 16
PARTS (OUTDOOR UNIT) 21
ACCESSORIES 27

FUJITSU GENERAL LIMITED

SPECIFICATIONS

ELECTRICAL DATA

TYPE		Cool & heat inverter	
INDOOR UNIT		ASTG09LVCC	ASTG12LVCB
OUTDOOR UNIT		AOTG09LVCC	AOTG12LVCB
COOLING CAPACITY		2.50 kW	3.50 kW
HEATING CAPACITY		3.40 kW	4.80 kW
POWER SOURCE		240 V	240 V
FREQUENCY		50 Hz	50 Hz
RUNNING CURRENT	Cooling	2.8 A	4.2 A
	Heating	3.5 A	5.0 A
INPUT WATTS	Cooling	0.58 kW	0.92 kW
	Heating	0.73 kW	1.11 kW
E.E.R.	Cooling	4.31 kW/kW	3.80 kW/kW
COP	Heating	4.66 kW/kW	4.32 kW/kW
MOISTURE REMOVAL		1.3 L/h	1.8 L/h
AIR CIRCULATION HIGH	Cooling	790 m3/h	810 m3/h
	Heating	810 m3/h	860 m3/h
MAXIMUM CURRENT	Cooling	6.0 A	6.5 A
	Heating	7.5 A	9.0 A

FAN MOTOR

POWER SOURCE		240 V	
INDOOR UNIT Cooling	High	1,120 r.p.m.	1,150 r.p.m.
	Medium	970 r.p.m.	990 r.p.m.
	Low	800 r.p.m.	800 r.p.m.
	Quiet	600 r.p.m.	610 r.p.m.
INDOOR UNIT Heating	High	1,150 r.p.m.	1,200 r.p.m.
	Medium	990 r.p.m.	1,020 r.p.m.
	Low	820 r.p.m.	820 r.p.m.
	Quiet	610 r.p.m.	610 r.p.m.
OUTDOOR UNIT	Cooling	780 r.p.m.	850 r.p.m.
OUTDOOR UNIT	Heating	720 r.p.m.	750 r.p.m.

NOISE LEVEL

INDOOR UNIT Cooling	High	41 dB	42 dB
	Medium	36 dB	37 dB
	Low	30 dB	30 dB
	Quiet	21 dB	21 dB
INDOOR UNIT Heating	High	42 dB	43 dB
	Medium	37 dB	38 dB
	Low	31 dB	31 dB
	Quiet	22 dB	22 dB
OUTDOOR UNIT	Cooling	47 dB	48 dB
OUTDOOR UNIT	Heating	47 dB	48 dB

COMPRESSOR AND REFRIGERANT

COMPRESSOR TYPE		Hermetic type, 4 pole, 3 phase, DC inverter motor, Rotary	
DISCRIMINATION		5SS072XHA01	DA89X1C-20FZ2
WEIGHT (with oil)		6.0 kg	9.2 kg
PRECHARGED REFRIGERANT		850 g	1,050 g
FULL CHARGE Pipe length	15 m	850 g	1,050 g
	20 m	950 g	1,150 g
ADDITIONAL REFRIGERANT		20 g/m	
MAXIMUM PIPING HEIGHT		15 m	
REFRIGERANT TYPE		R410A	

DIMENSIONS

INDOOR UNIT	H x W x D	293 x 790 x 225 mm	
OUTDOOR UNIT	H x W x D	540 x 660 x 290	540 x 790 x 290

WEIGHT

INDOOR UNIT	Shipping / Net	12.0 kg / 9.5 kg	
OUTDOOR UNIT	Shipping / Net	28 / 25 kg	37 / 34 kg

DIMENSIONS

Unit : mm

INDOOR UNIT

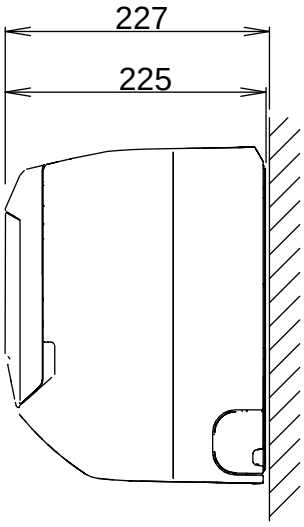

Drain hose

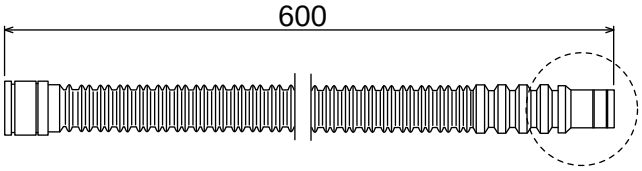

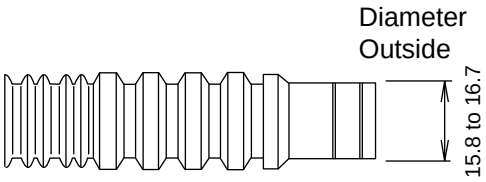

Inside : 13.8 mm

Unit : mm

OUTDOOR UNIT
AOTG09LVCC

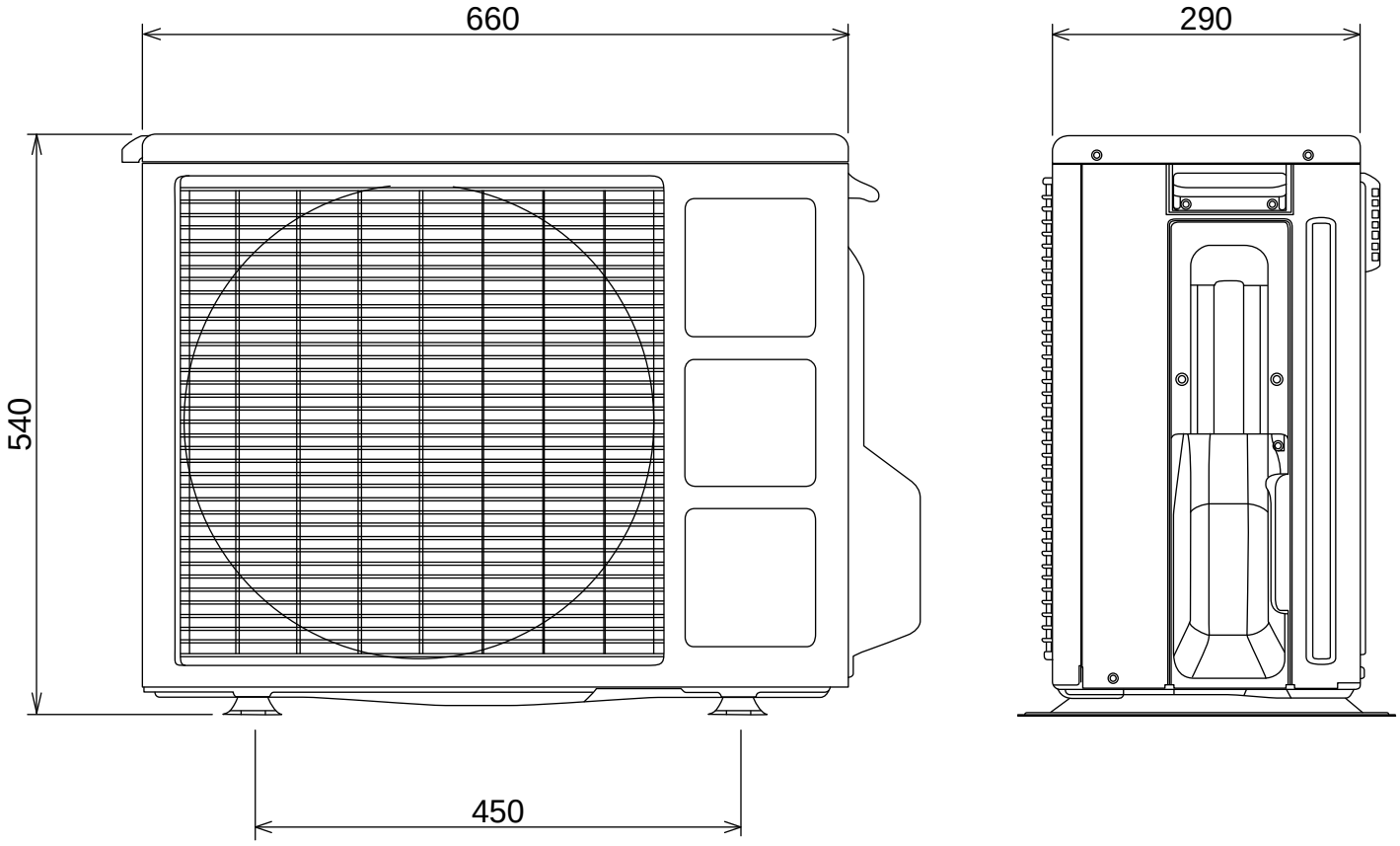

AOTG12LVCC

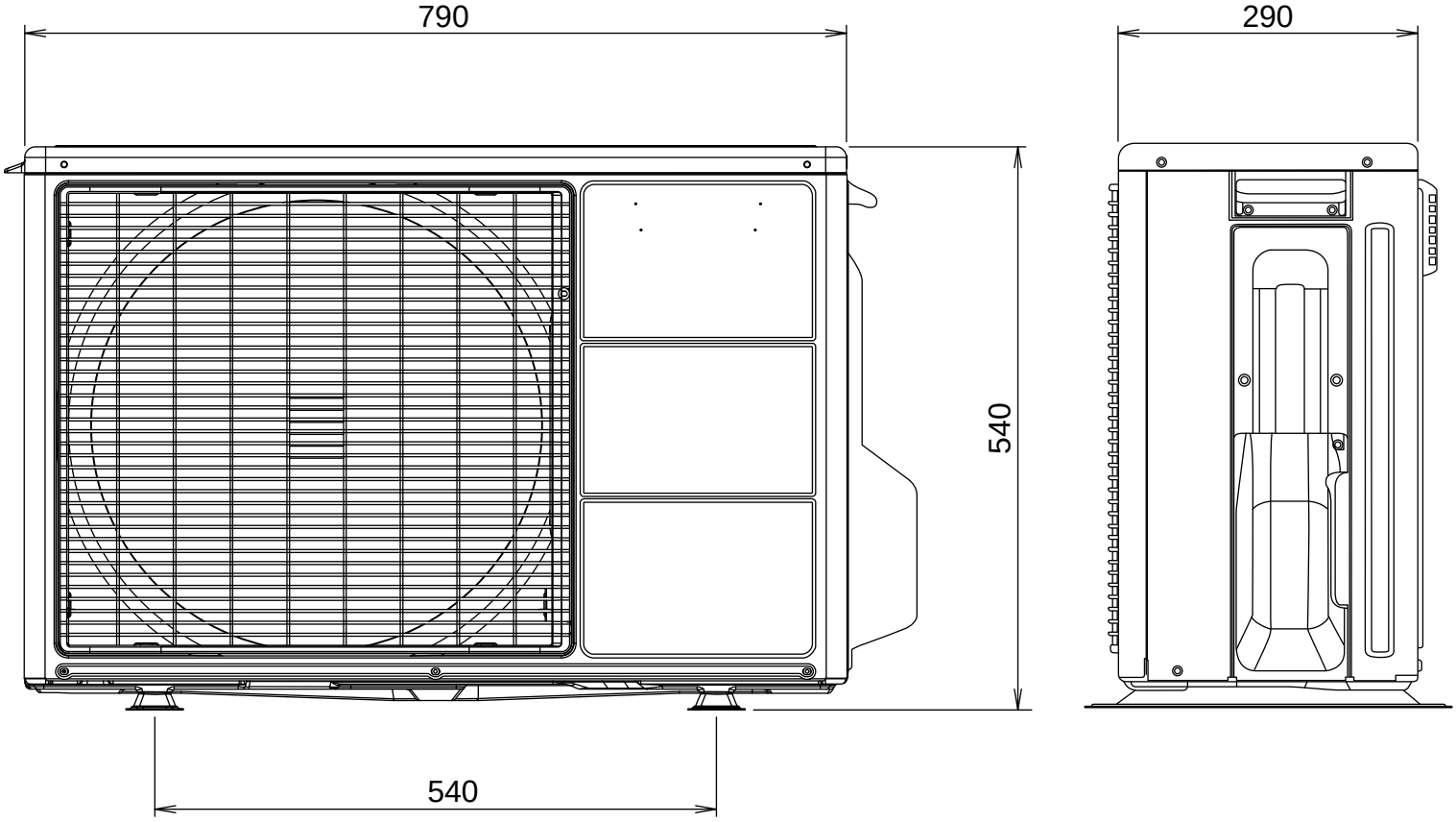

REFRIGERANT SYSTEM DIAGRAM

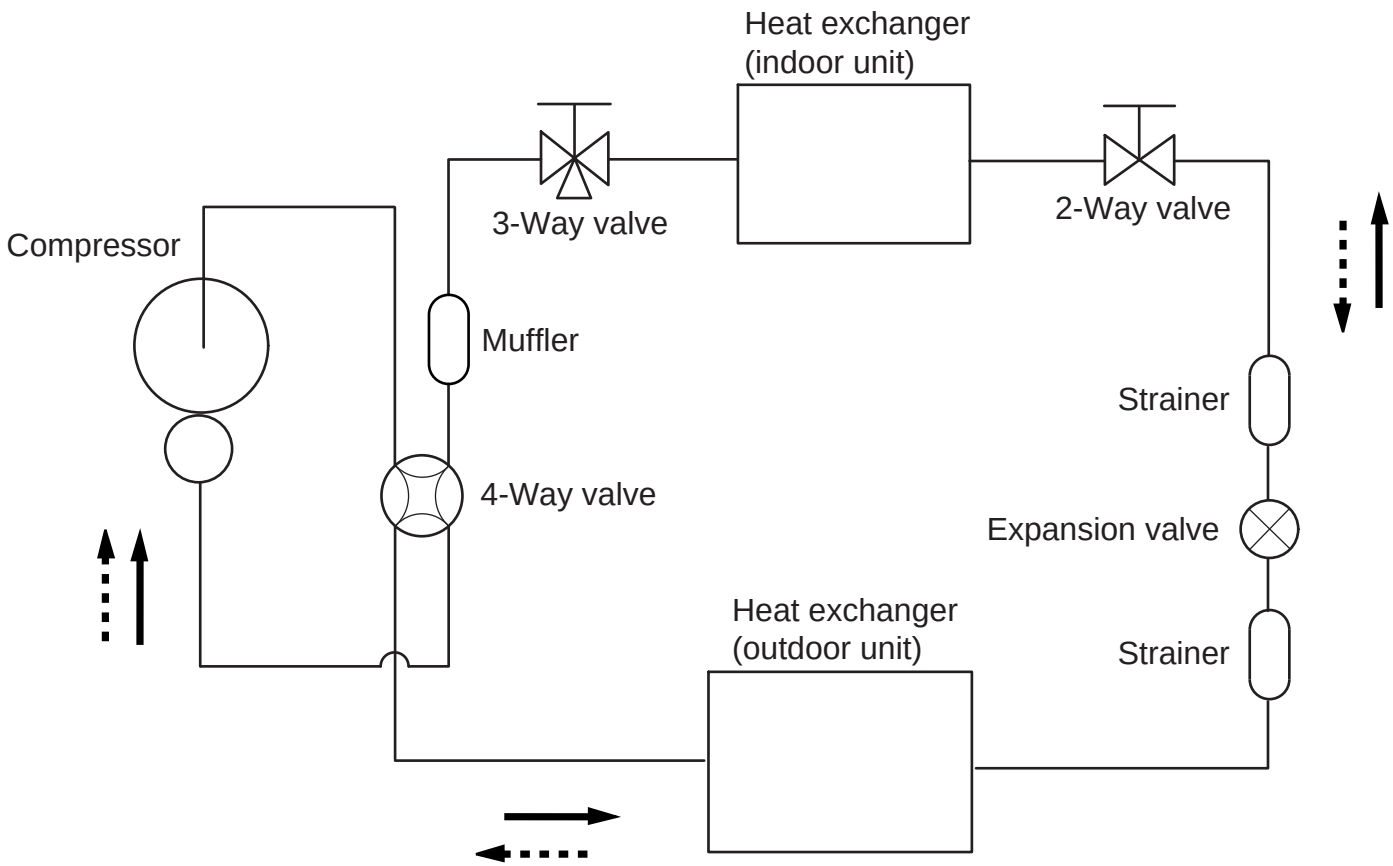

Refrigerant pipe diameter
Liquid : 1/4" (6.35 mm)
Gas : 3/8" (9.52 mm)

Refrigerant direction

Cooling
Heating

CIRCUIT DIAGRAM

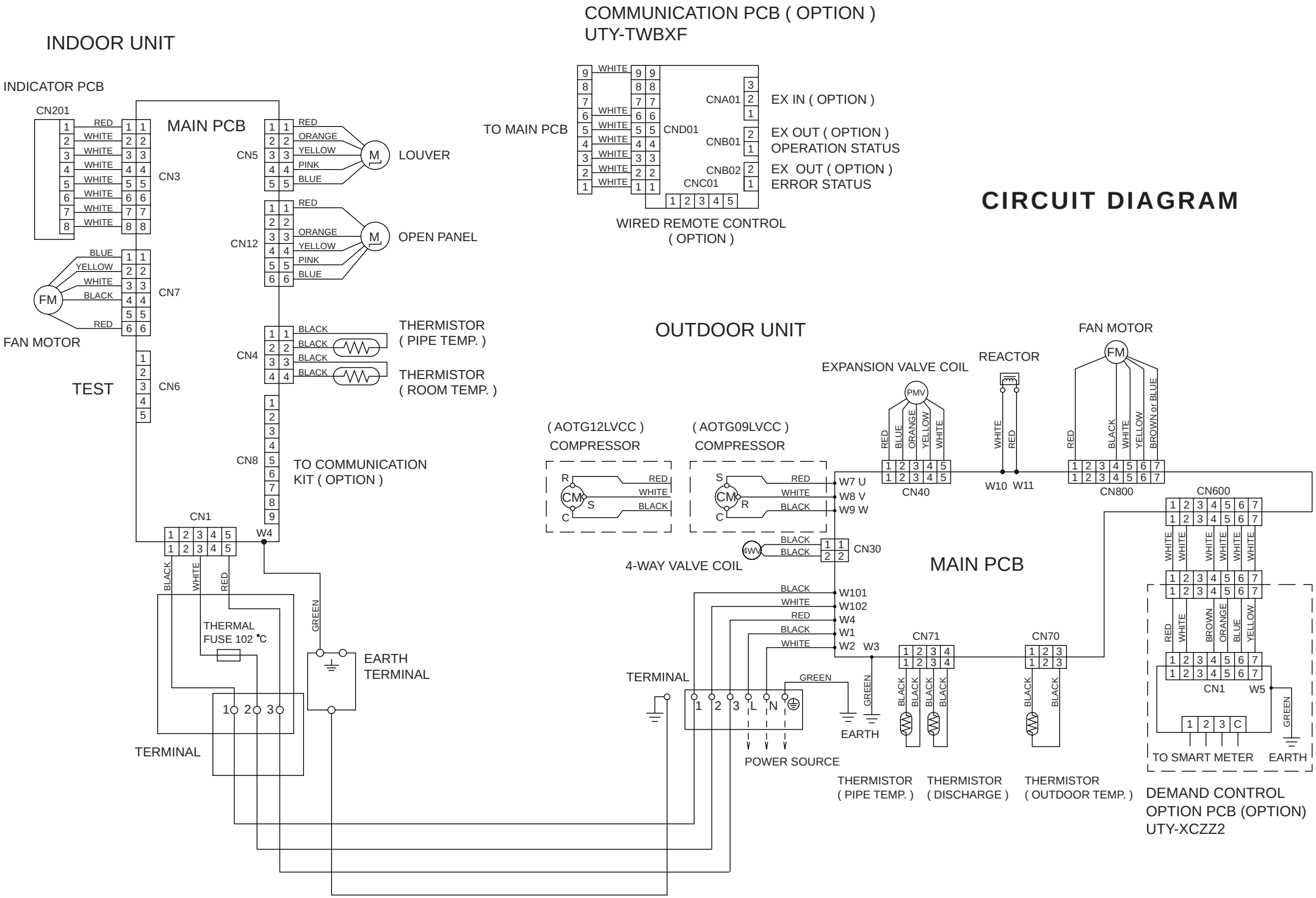

INDOOR PCB CIRCUIT DIAGRAM

CONTROL UNIT
ASTG09LVCC : EZ-012THSE
ASTG12LVCC : EZ-012WHSE

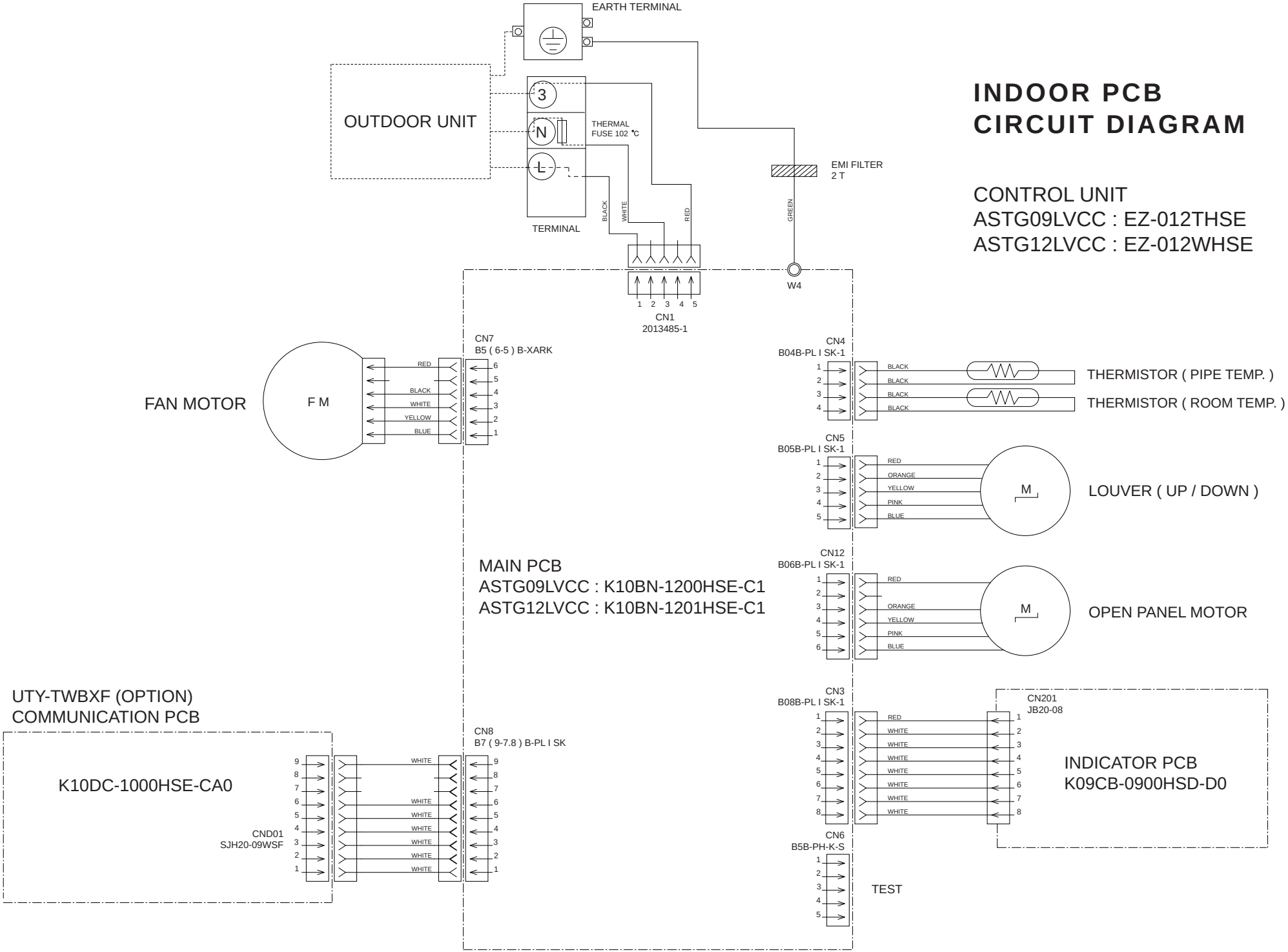

INDOOR UNIT
MAIN PCB
ASTG09LVCC : K10BN-1200HSE-C1
ASTG12LVCC : K10BN-1201HSE-C1

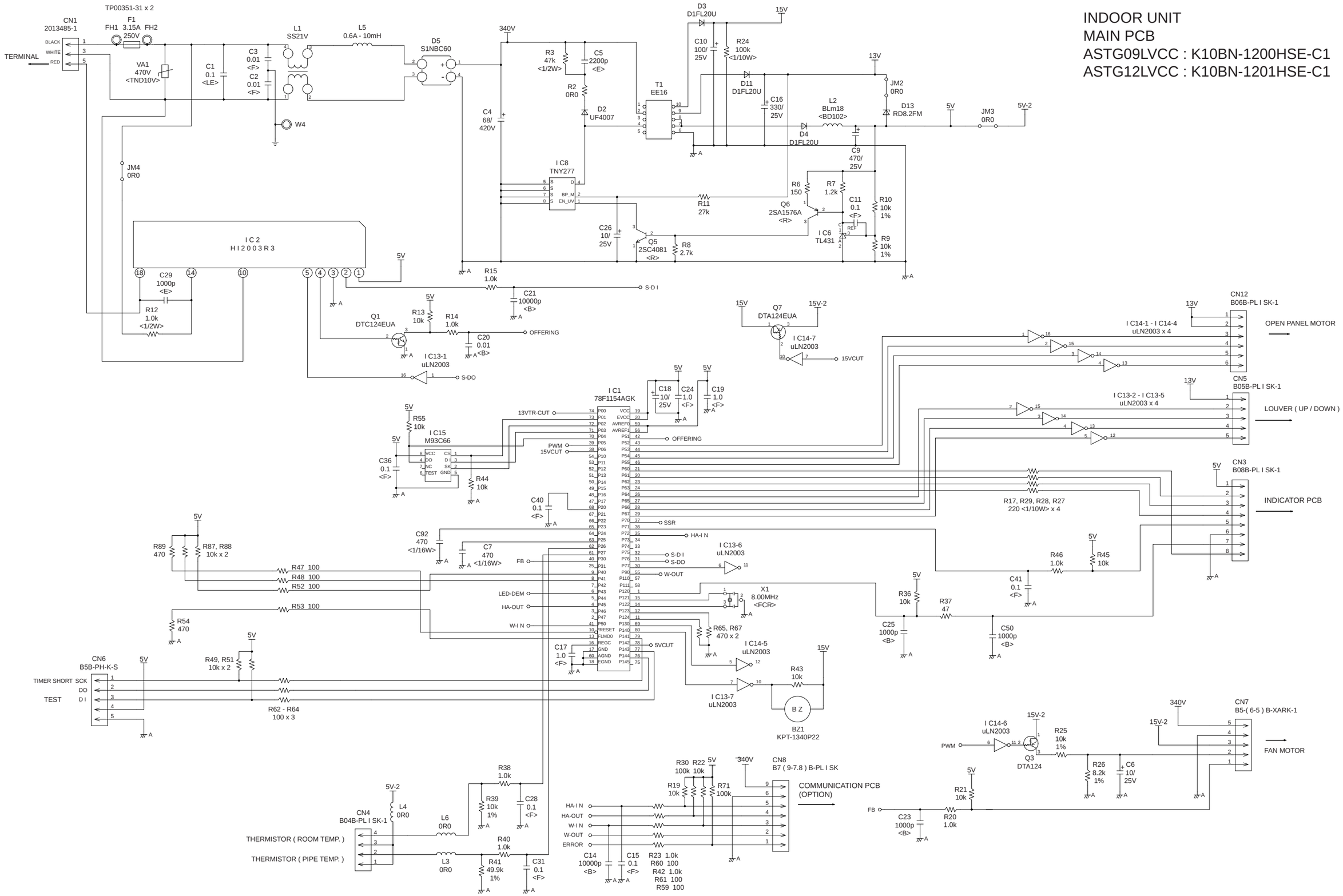

INDOOR UNIT
INDICATOR PCB
K09CB-0900HSD-D0

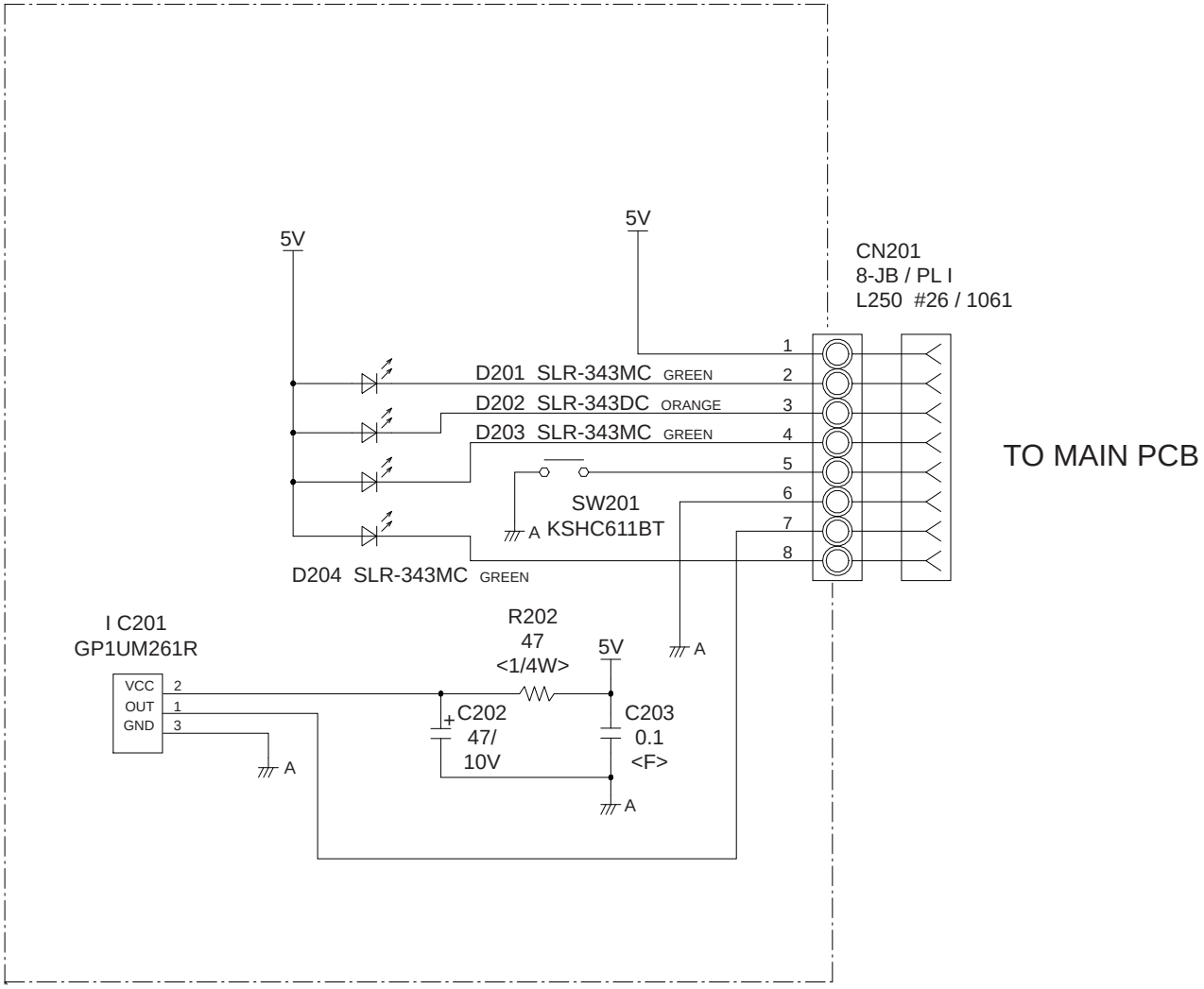

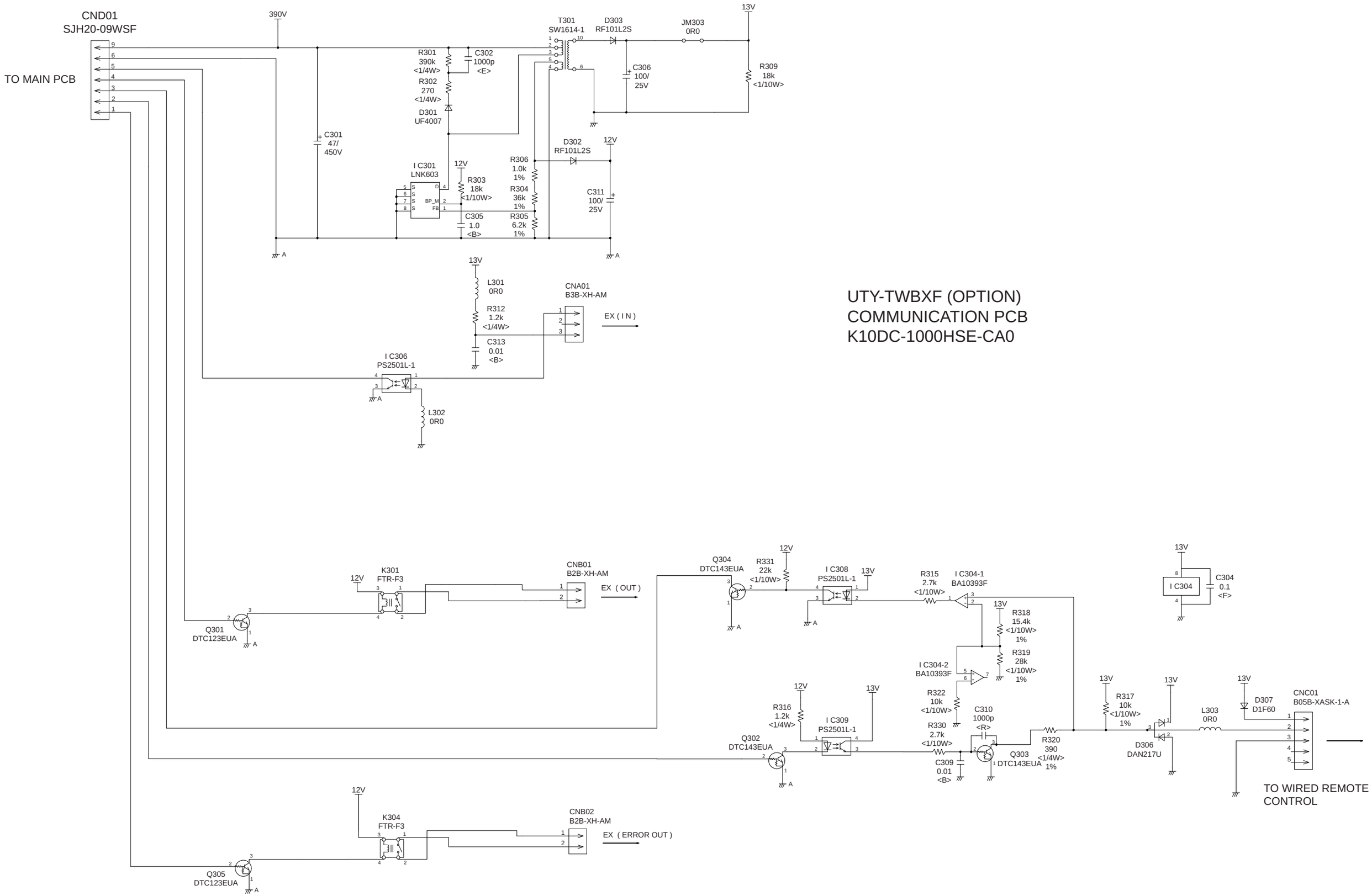

UTY-TWBXF (OPTION)
COMMUNICATION PCB
K10DC-1000HSE-CA0

OUTDOOR PCB
CIRCUIT DIAGRAM

INVERTER ASSEMBLY
AOTG09LVCC : EZ-0126HUE
AOTG12LVCC : EZ-0127HUE

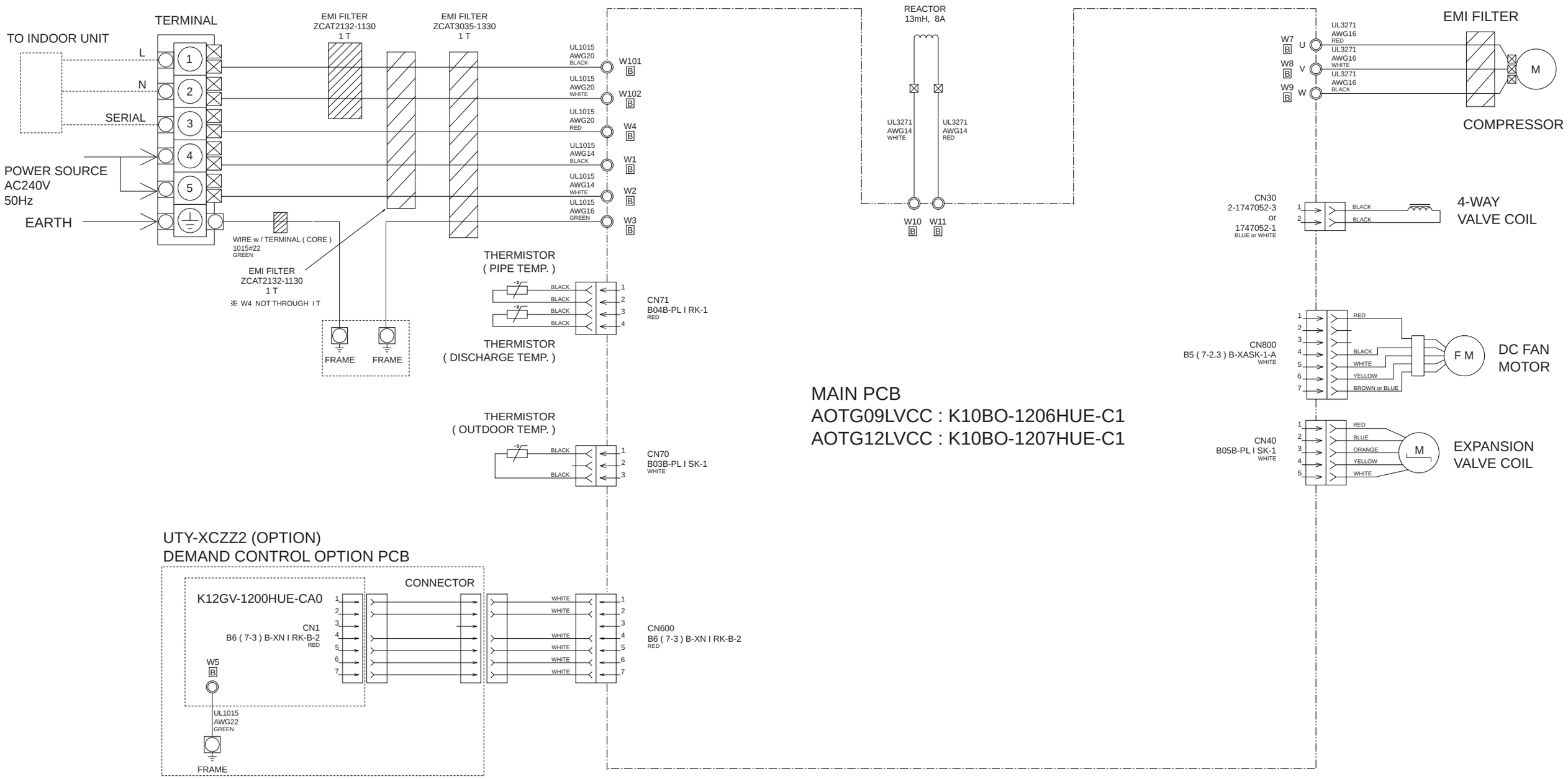

OUTDOOR UNIT, MAIN PCB
AOTG09LVCC : K10BO-1206HUE-C1
AOTG12LVCC : K10BO-1207HUE-C1

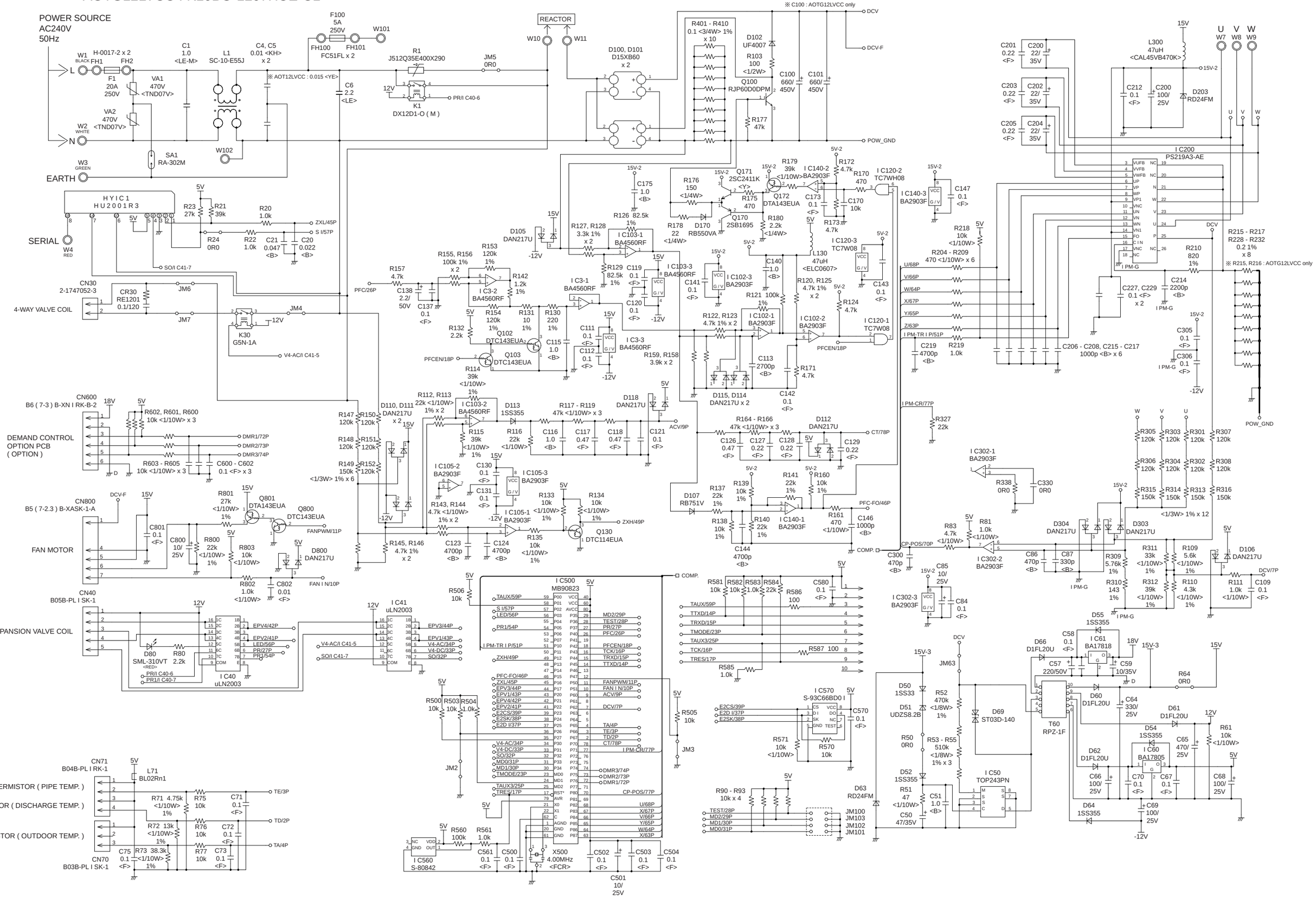

UTY-XCZZ2 (OPTION)
DEMAND CONTROL OPTION PCB
K12GV-1200HUE-CA0

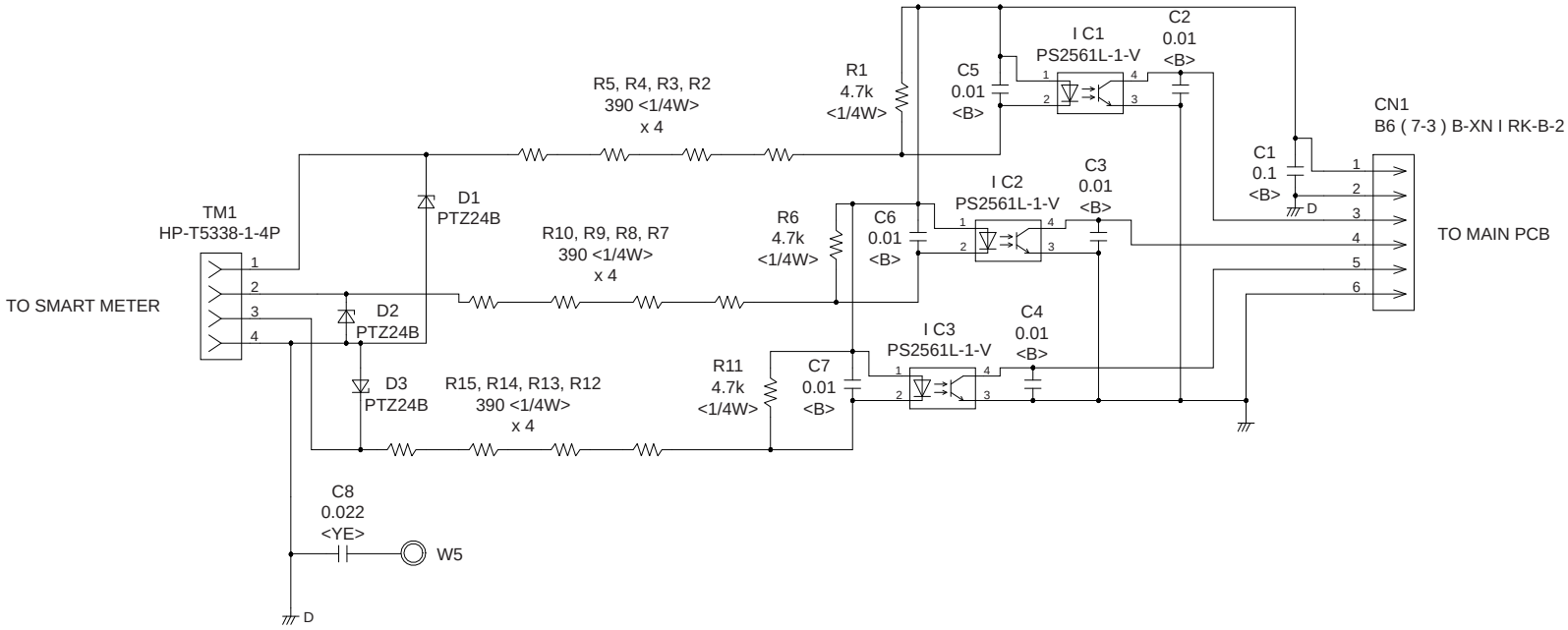

ERROR DETECTION

INDOOR UNIT and WIRED REMOTE CONTROL

If you use a wireless remote control, the lamp on the photo detector unit will output error codes by way of blinking patterns. If you use a wired type remote control, error codes will appear on the remote control display. See the lamp blinking patterns and error codes in the table. An error display is displayed only during running.

Troubleshooting with a wired remote control.

If an error occurs, the following display will be shown. (“Er” will appear in the set room temperature display.)

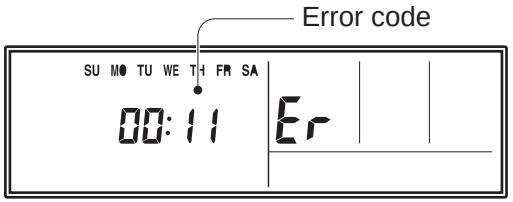

EX. Self-diagnosis

● : 0.5s on / 0.5s off

◇ : 0.1s on / 0.1s off

( ) : Number of flashing

Indoor unit LED			Wired remote control	Description
OPERATION (green)	TIMER (orange)	ECONOMY (green)		
● (1)	● (1)	◇	11	Serial communication error
● (1)	● (2)	◇	12	Wired remote control communication error
● (1)	● (5)	◇	15	Check run unfinished
● (2)	● (1)	◇	21	Unit number or Refrigerant circuit address setting error [Simultaneous Multi]
● (2)	● (2)	◇	22	Indoor unit capacity error
● (2)	● (3)	◇	23	Combination error
● (2)	● (4)	◇	24	• Connection unit number error (indoor slave unit) [Simultaneous Multi] • Connection unit number error (indoor unit or branch unit) [Flexible Multi]
● (2)	● (7)	◇	27	Master unit, slave unit set-up error [Simultaneous Multi]
● (3)	● (2)	◇	32	Indoor unit PCB model information error
● (3)	● (5)	◇	35	Manual auto switch error
● (4)	● (1)	◇	41	Inlet air temp. sensor error
● (4)	● (2)	◇	42	Indoor unit Heat Ex. Middle temp. sensor error
● (5)	● (1)	◇	51	Indoor unit fan motor error
● (5)	● (3)	◇	53	Drain pump error
● (5)	● (7)	◇	57	Damper error
● (5)	● (15)	◇	5U	Indoor unit error
● (6)	● (2)	◇	62	Outdoor unit main PCB model information error or communication error
● (6)	● (3)	◇	63	Inverter error
● (6)	● (4)	◇	64	Active filter error, PFC circuit error
● (6)	● (5)	◇	65	Trip terminal L error

Indoor unit LED			Wired remote control	Description
OPERATION (green)	TIMER (orange)	ECONOMY (green)		
● (6)	● (10)	◇	6A	Display PCB microcomputers communication error
● (7)	● (1)	◇	71	Discharge temp. sensor error
● (7)	● (2)	◇	72	Compressor temp. sensor error
● (7)	● (3)	◇	73	Outdoor unit Heat Ex. liquid temp. sensor error
● (7)	● (4)	◇	74	Outdoor temp. sensor error
● (7)	● (5)	◇	75	Suction Gas temp. sensor error
● (7)	● (6)	◇	76	• 2-way valve temp. sensor error • 3-way valve temp. sensor error
● (7)	● (7)	◇	77	Heat sink temp. sensor error
● (8)	● (2)	◇	82	• Sub-cool Heat Ex. gas inlet temp. sensor error • Sub-cool Heat Ex. gas outlet temp. sensor error
● (8)	● (3)	◇	83	Liquid pipe temp. sensor error
● (8)	● (4)	◇	84	Current sensor error
● (8)	● (6)	◇	86	• Discharge pressure sensor error • Suction pressure sensor error • High pressure switch error
● (9)	● (4)	◇	94	Trip detection
● (9)	● (5)	◇	95	Compressor rotor position detection error (permanent stop)
● (9)	● (7)	◇	97	Outdoor unit fan motor error
● (9)	● (9)	◇	99	4-way valve error
● (10)	● (1)	◇	A1	Discharge temp. error
● (10)	● (3)	◇	A3	Compressor temp. error
● (10)	● (4)	◇	A4	High pressure error
● (10)	● (5)	◇	A5	Low pressure error
● (13)	● (2)	◇	J2	Branch boxes error [Flexible Multi]

OUTDOOR UNIT

LED	ERROR
on	Discharge temperature error
5.0 second on / 5.0 second off	Fan motor error
2.0 second on / 2.0 second off	CT error
1.0 second on / 1.0 second off	Timer contraction
0.5 second on / 0.5 second off	IPM overcurrent protection
0.1 second on / 0.1 second off	Thermistor error
0.1 second on / 2.0 second off	Compressor location error

DEMAND RESPONSE (DR) and indoor unit operation

This product is designed to be compatible with
Air Conditioning Demand Response program.

To utilize the function, Demand Response adapter kit that interconnects your air conditioner and Demand Response Enabling Device (DRED) needs to be installed in your air conditioning system, and you need a separate arrangement.

When your electricity supplier activates one of the following 3 DR modes, the air conditioner switches over to the appropriate operation, and the OPERATION indicator (green) on the indoor unit blinks to inform you it has been entered to the DR mode.

Blinking pattern

ON (4 seconds) → OFF (0.5 seconds) → ON (0.5 seconds) → OFF (0.5 seconds) → ON (4 seconds)

The indicator will keep blinking until the unit finishes the function.

OPERATION indicator
(indoor unit)

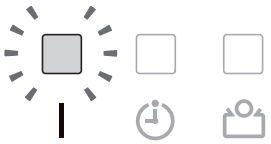

Note: Shape, number, and the arrangement of the indicators are unit-dependent. Some indoor units may not have the indicators unless the optional control panel or IR receiver kit has been installed.

DR mode	Description of operation in this mode
DR mode 1	Compressor off.
DR mode 2	The air conditioner continues to cool or heat during the Demand Response event, but the electrical energy consumed by the air conditioner in a half hour period is not more than 50% of the total electrical energy that would be consumed if operating at the rated capacity in a half hour period.
DR mode 3	The air conditioner continues to cool or heat during the Demand Response event, but the electrical energy consumed by the air conditioner in a half hour period is not more than 75% of the total electrical energy that would be consumed if operating at the rated capacity in a half hour period.

When the unit goes into a DR mode, it performs moderate operation though the cooling or heating effect may be reduced. You cannot override this function with changing the temperature setting by using the remote control or other actions unless the unit finishes the function.

Note: Stopping the operation of the air conditioner by using the remote control or by OFF timer are valid in DR mode. If the timer operation is interfered by an interruption of power supply such as a blackout and the power supply is resumed, no indication of the DR mode is performed.
During the DR mode, no indication of "filter sign" is performed.
Powerful operation is performedwithin the operable range of the DR mode.

When the unit finishes the function, it will perform the operation that was previously performed before entering the DR mode.
When this air conditioner is connected to a DRED, and you have operational issues, contact your electricity supplier first to check whether they are activating any of the DR mode described above.
If the air conditioner is under demand controlling, consult on the issues with your electricity supplier.
If they are not demand controlling the air conditioner, refer to your warranty card for the contact details of Fujitsu General (AUST.) PTY LIMITED or
visit our website : www.fujitsugeneral.com.au

PARTS

INDOOR UNIT

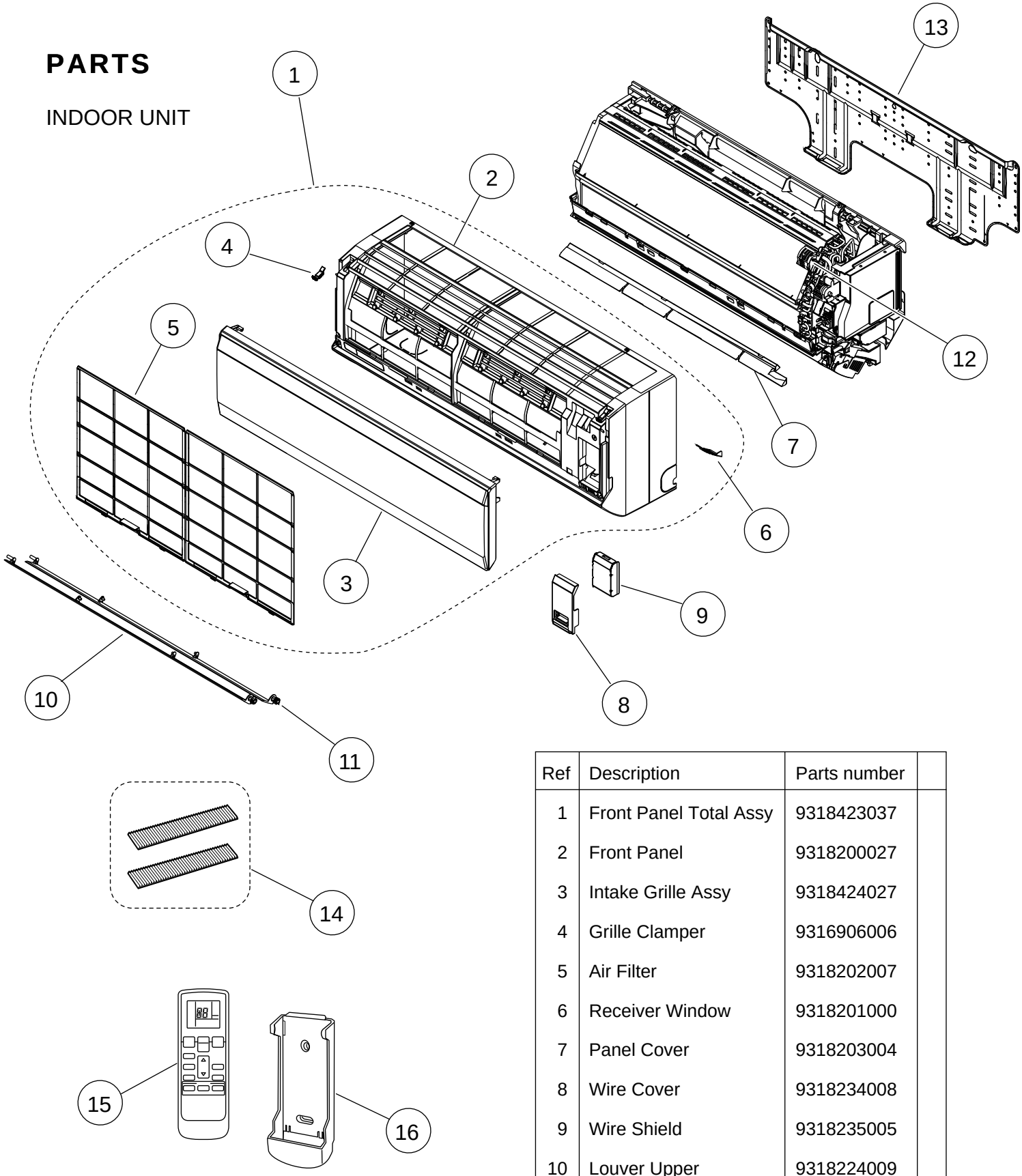

Ref	Description	Parts number	
1	Front Panel Total Assy	9318423037	
2	Front Panel	9318200027	
3	Intake Grille Assy	9318424027	
4	Grille Clamper	9316906006	
5	Air Filter	9318202007	
6	Receiver Window	9318201000	
7	Panel Cover	9318203004	
8	Wire Cover	9318234008	
9	Wire Shield	9318235005	
10	Louver Upper	9318224009	
11	Louver Lower	9318225006	
12	Room Thermistor Holder	9311948018	
13	Bracket Panel	9318236019	
14	Air Clean Filter Assy	9316902022	
15	Remote Control	9379219006	
16	Remote Control Holder	9305642045	

INDOOR UNIT

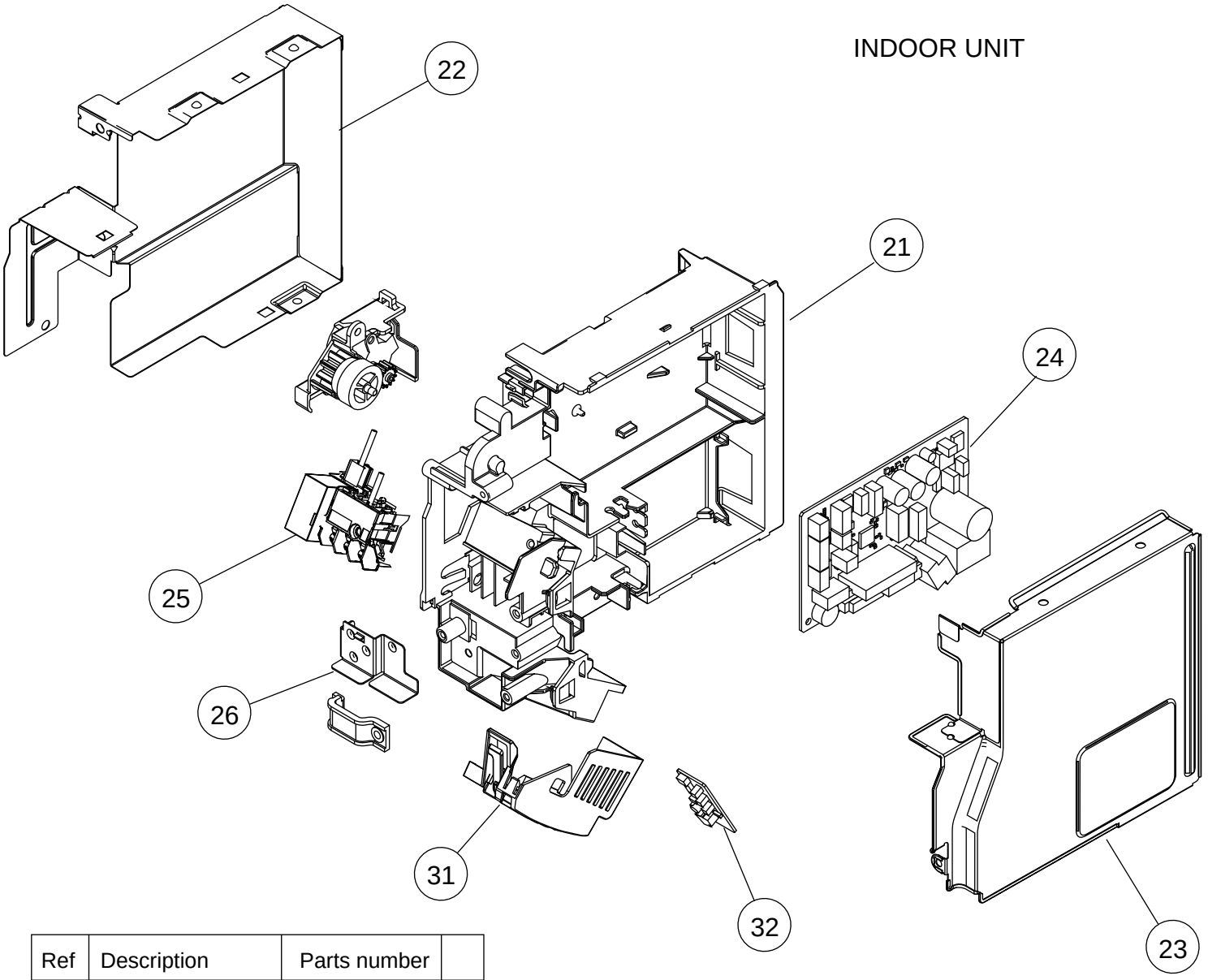

Ref	Description	Parts number	
21	Control Box	9318228007	
22	Box Shield Assy	9318387001	
23	Cover Shield	9318230000	
24	Main PCB (09)	9708673110	
24	Main PCB (12)	9708673127	
25	Terminal	9900638009	
26	Earth Terminal	9318231014	
27	Gear Cover	9318211016	
28	Step Motor	9900139179	
29	Panel Gear	9316653009	
30	Gear A	9309994003	
31	Display Case	9318232004	
32	Display PCB	9708365015	
--	Thermistor Assy	9900563011	

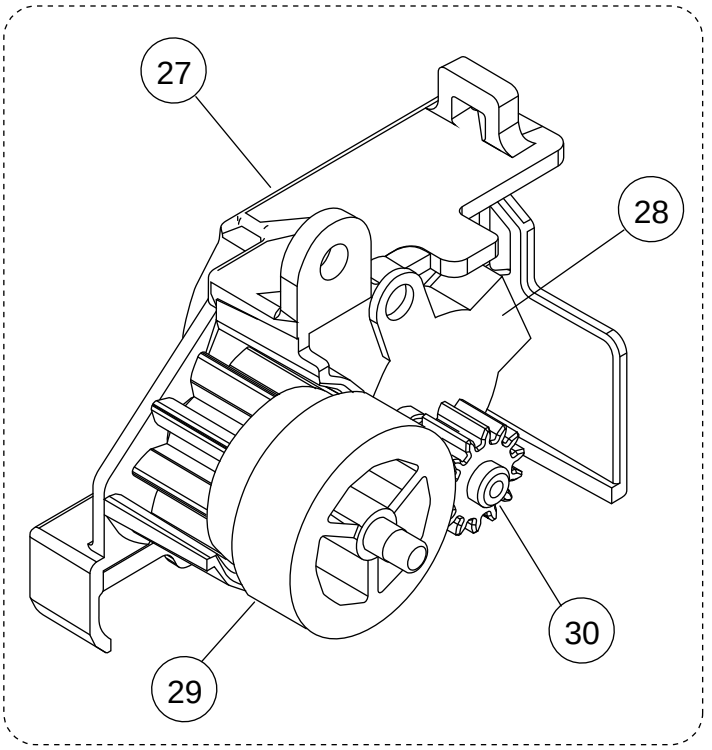

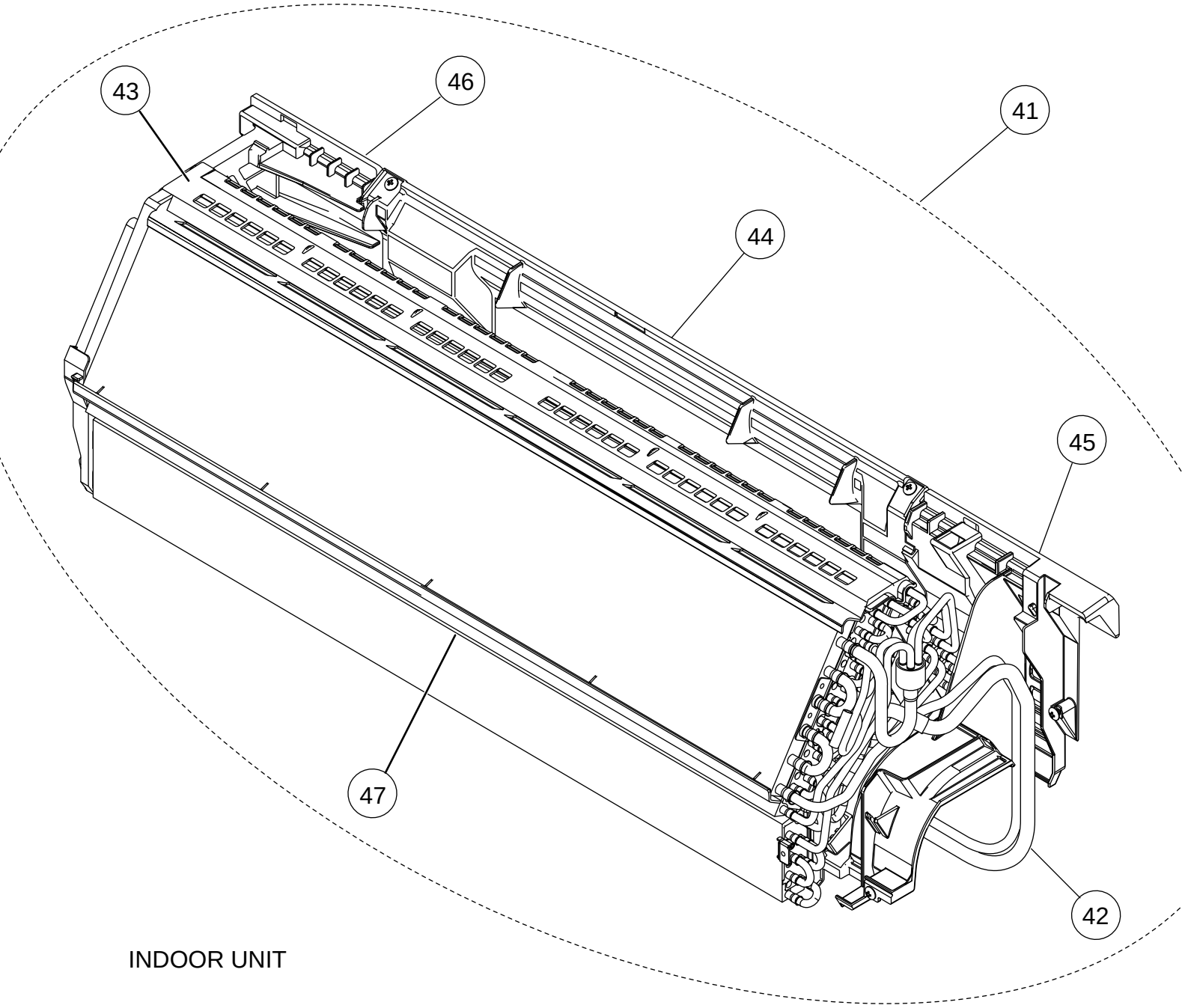

INDOOR UNIT

Ref	Description	Part number	
41	Evaporator Total Assy	9318397000	
42	Joint Pipe Assy	9318400007	
43	Filter Guide	9318223002	
44	Rear Bracket	9318221008	
45	Evaporator Holder R	9318220001	
46	Evaporator Holder L	9318219005	
47	Water Seal B	9318420005	

INDOOR UNIT

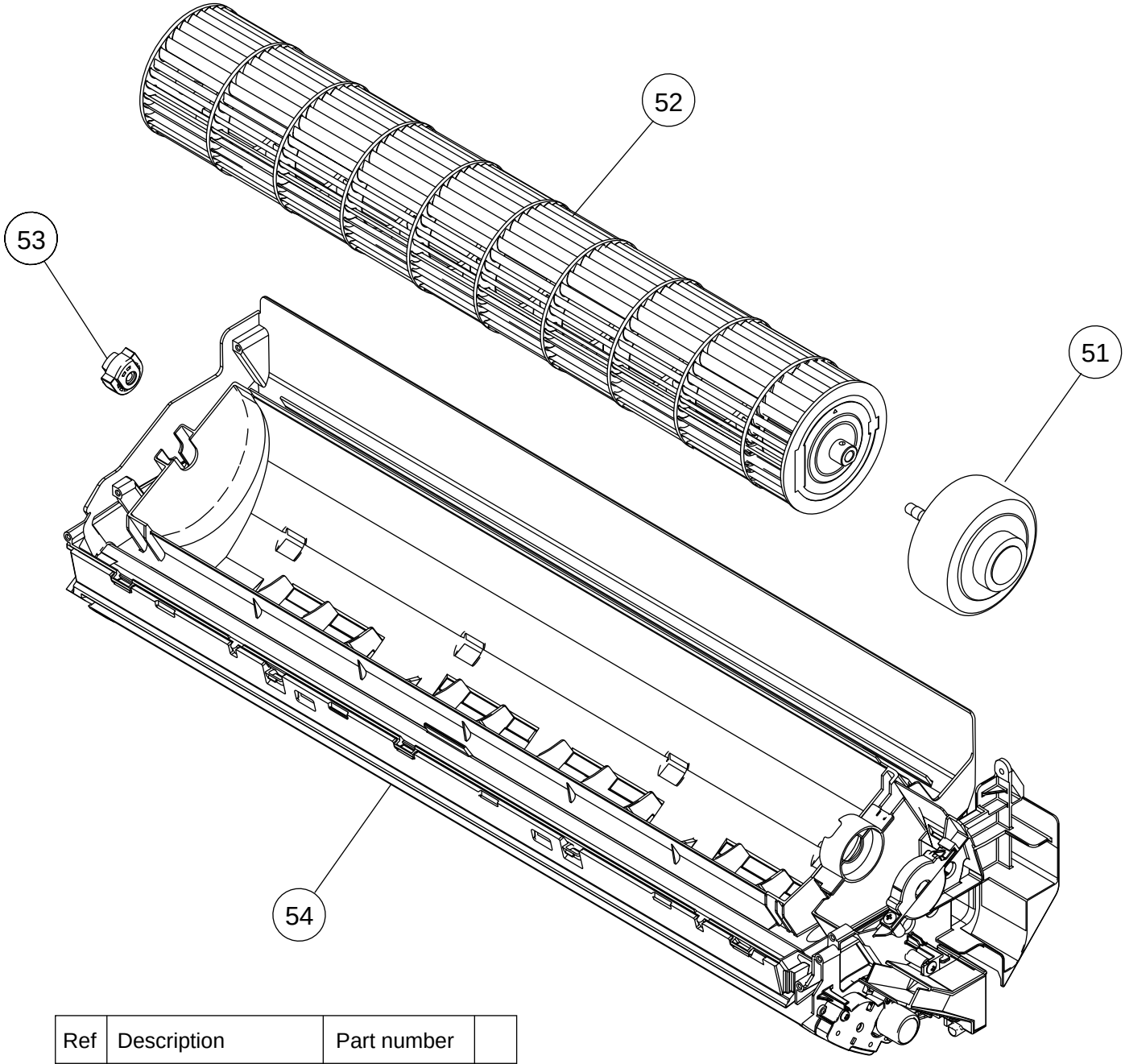

Ref	Description	Part number	
51	Fan Motor	9602783038	
52	Crossflow Fan Assy	9315024039	
53	Bearing C Assy	9306628017	
54	Casing Assy	9318392029	

INDOOR UNIT
Casing assy

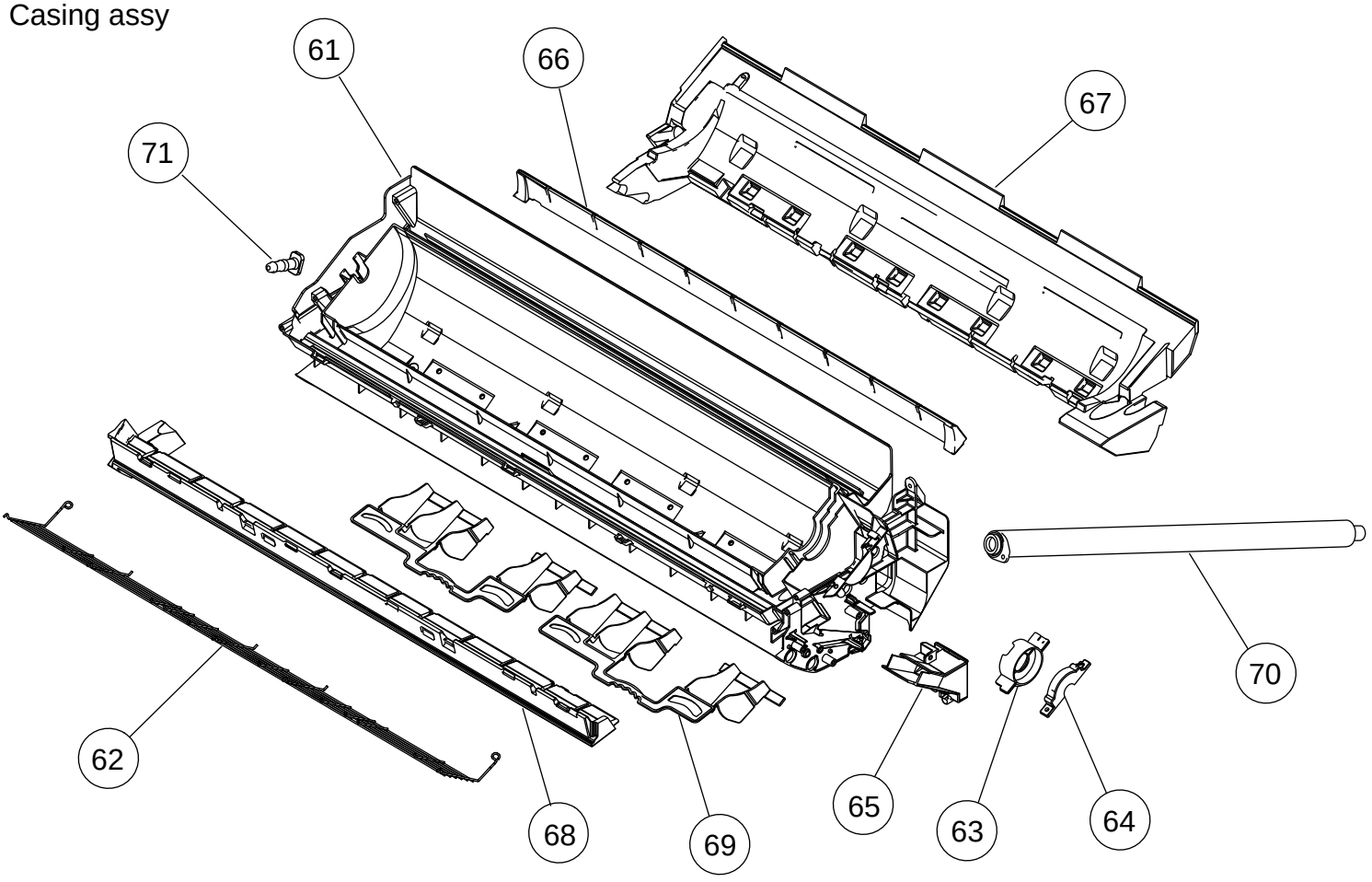

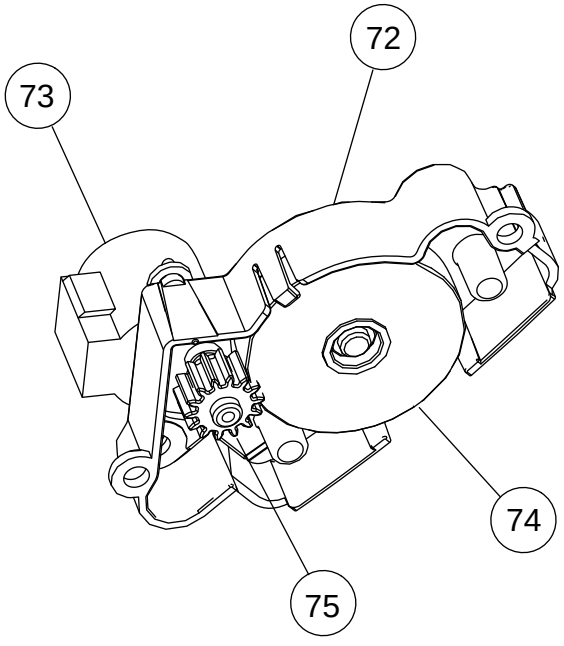

Ref	Description	Parts number	
61	Casing	9318212013	
62	Fan Guard	9318646009	
63	Motor Cover	9316568006	
64	Motor Cover	9316601000	
65	Cable Guide	9316567009	
66	Casing Cover U	9318213003	
67	Casing Cover B	9318214017	
68	Casing Cover F	9318215007	
69	R and L Louver	9318216004	
70	Drain Hose Assy	9316904019	
71	Drain Cap	9316177017	
72	Louver Gear Holder	9318227000	
73	Motor Step	9900384128	
74	Louver Gear	9318226003	
75	Gear A	9309994003	

PARTS

OUTDOOR UNIT
AOTG09LVCC

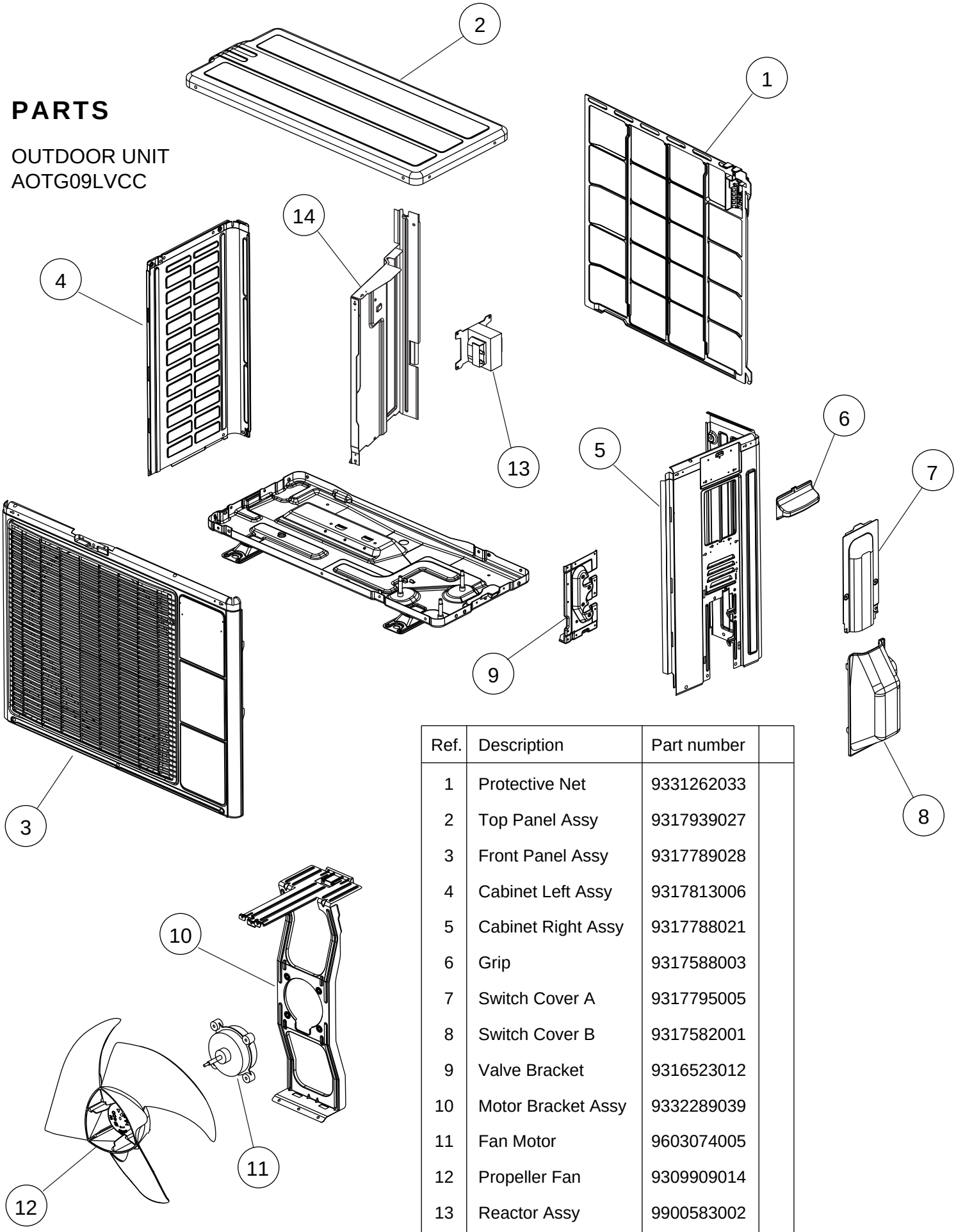

Ref.	Description	Part number	
1	Protective Net	9331262033	
2	Top Panel Assy	9317939027	
3	Front Panel Assy	9317789028	
4	Cabinet Left Assy	9317813006	
5	Cabinet Right Assy	9317788021	
6	Grip	9317588003	
7	Switch Cover A	9317795005	
8	Switch Cover B	9317582001	
9	Valve Bracket	9316523012	
10	Motor Bracket Assy	9332289039	
11	Fan Motor	9603074005	
12	Propeller Fan	9309909014	
13	Reactor Assy	9900583002	
14	Separator Assy	9317786010	
--	Emblem	9319151007	
--	Drain Assy	9303029022	

OUTDOOR UNIT
AOTG09LVCC

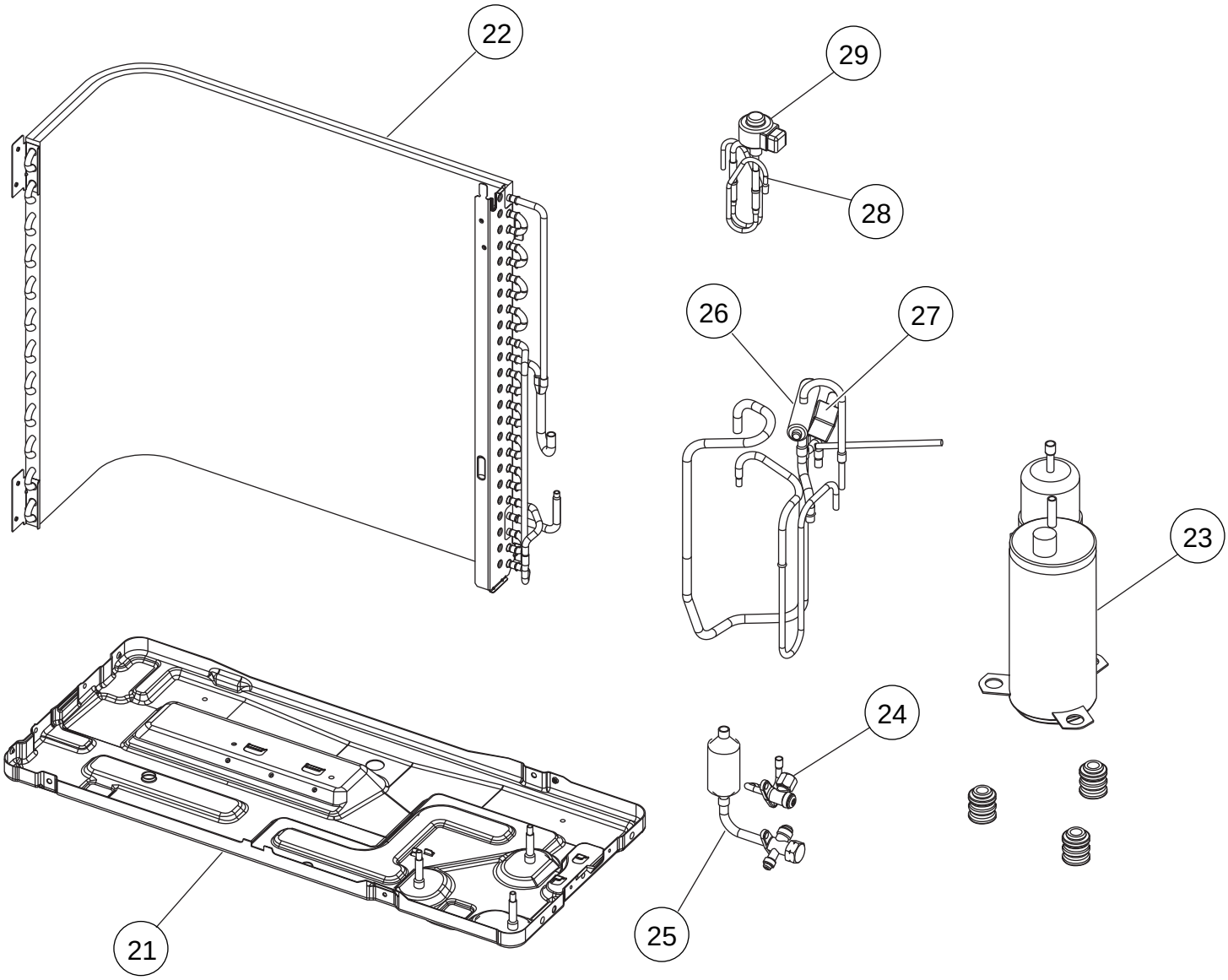

Ref.	Description	Part number	
21	Base Assy	9316916029	
22	Condenser Total Assy	9317367172	
23	Compressor Assy	9317083034	
24	2 way Valve Assy	9318252002	
25	3 way Valve Sub Assy	9317366038	
26	4 way Valve Assy	9317890021	
27	Solenoid	9970079023	
28	Pulse Motor Valve Assy	9317216036	
29	Expansion Valve Coil	9970103025	

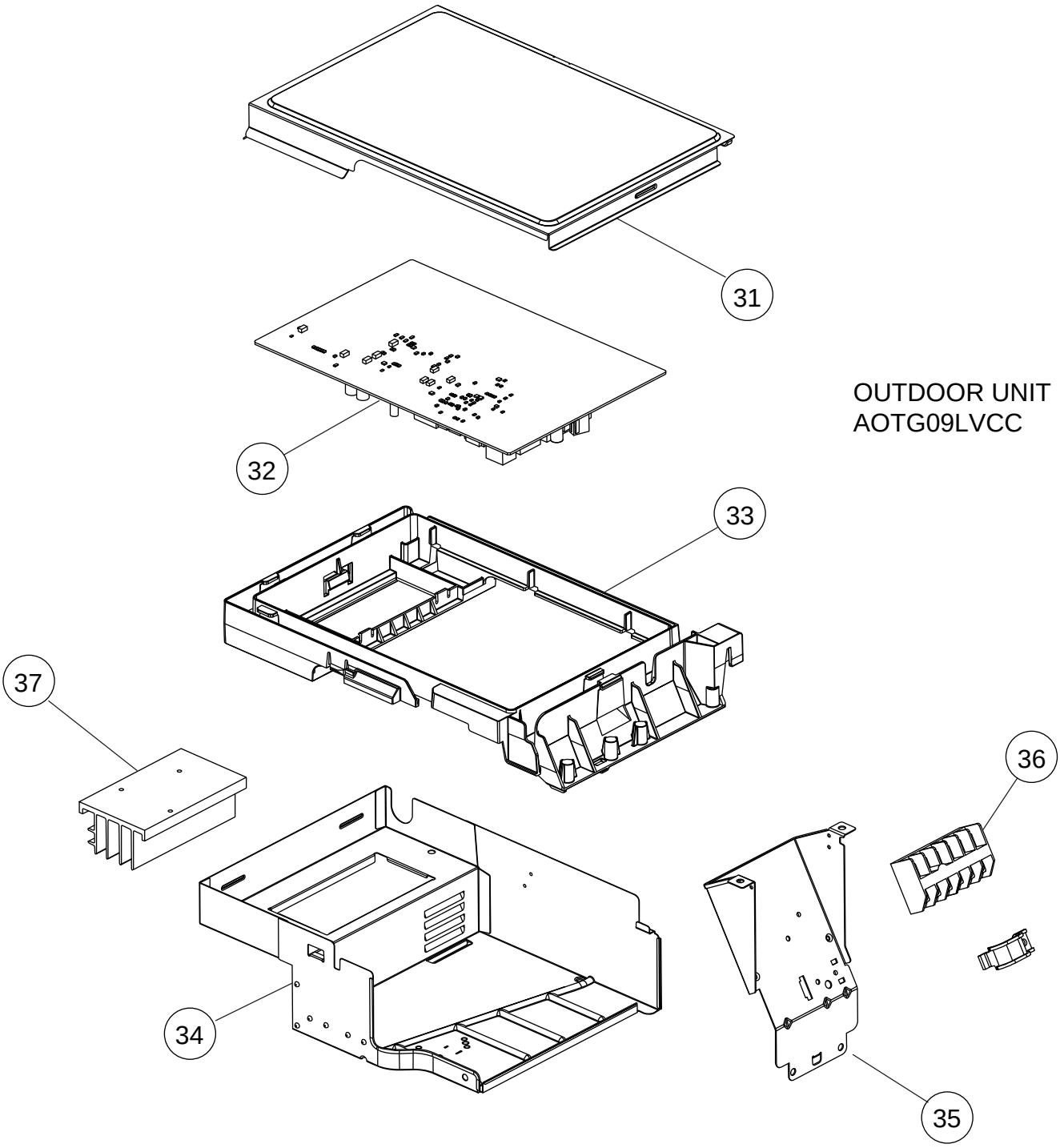

OUTDOOR UNIT
AOTG09LVCC

Ref.	Description	Part number	
31	Sealed Panel	9318181012	
32	Main PCB	9708682204	
33	PCB Holder	9318182019	
34	Inverter Case Assy	9332247015	
35	Terminal Bracket	9317816052	
36	Terminal	9900435028	
37	Heat Sink	9319070001	
--	Outdoor Thermistor	9900565008	
--	Thermistor Assy	9900628000	

OUTDOOR UNIT
AOTG12LVCC

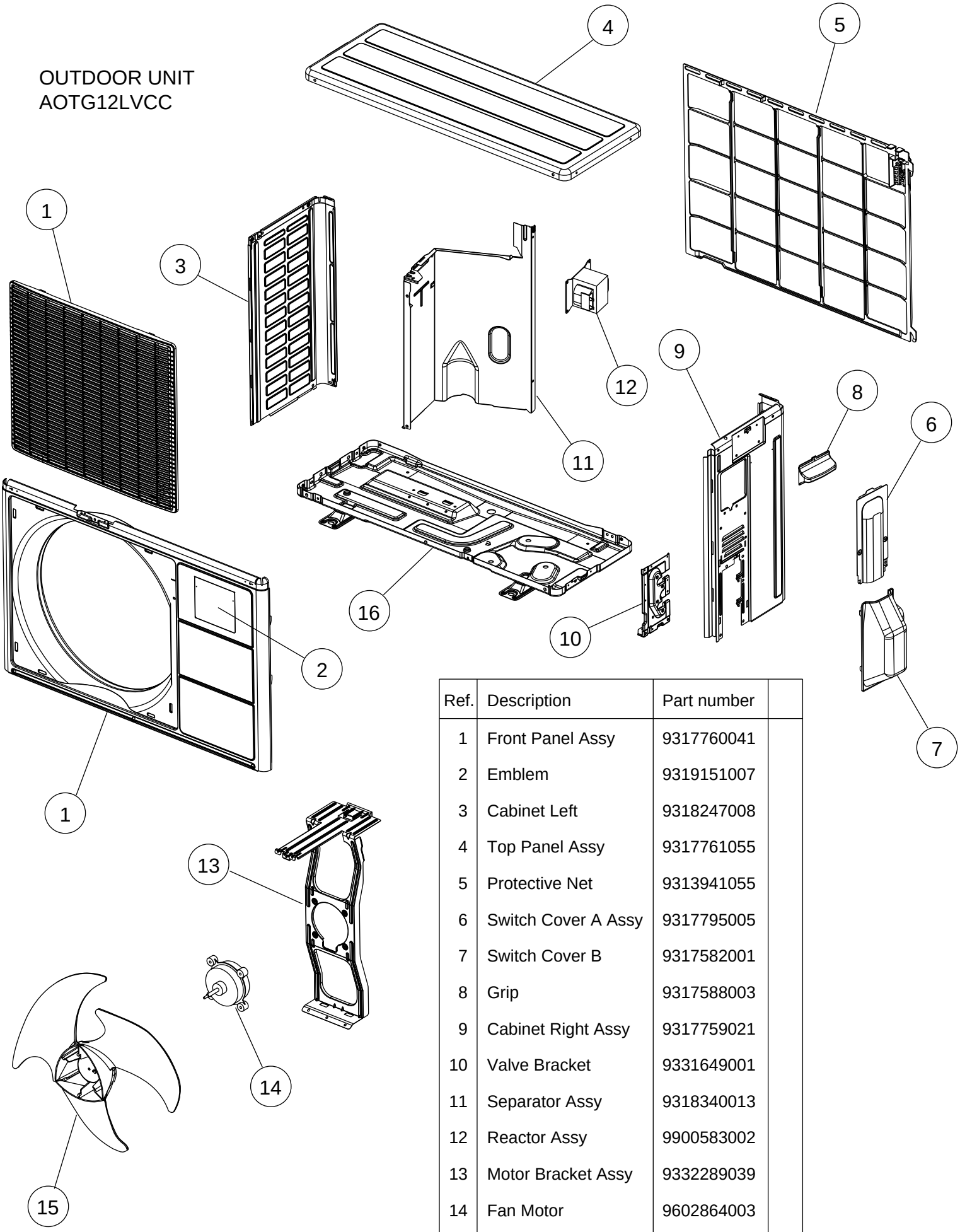

Ref.	Description	Part number	
1	Front Panel Assy	9317760041	
2	Emblem	9319151007	
3	Cabinet Left	9318247008	
4	Top Panel Assy	9317761055	
5	Protective Net	9313941055	
6	Switch Cover A Assy	9317795005	
7	Switch Cover B	9317582001	
8	Grip	9317588003	
9	Cabinet Right Assy	9317759021	
10	Valve Bracket	9331649001	
11	Separator Assy	9318340013	
12	Reactor Assy	9900583002	
13	Motor Bracket Assy	9332289039	
14	Fan Motor	9602864003	
15	Propeller Fan	9313808013	
16	Base Assy	9316885028	
--	Drain Assy	9303029022	

OUTDOOR UNIT
AOTG12LVCC

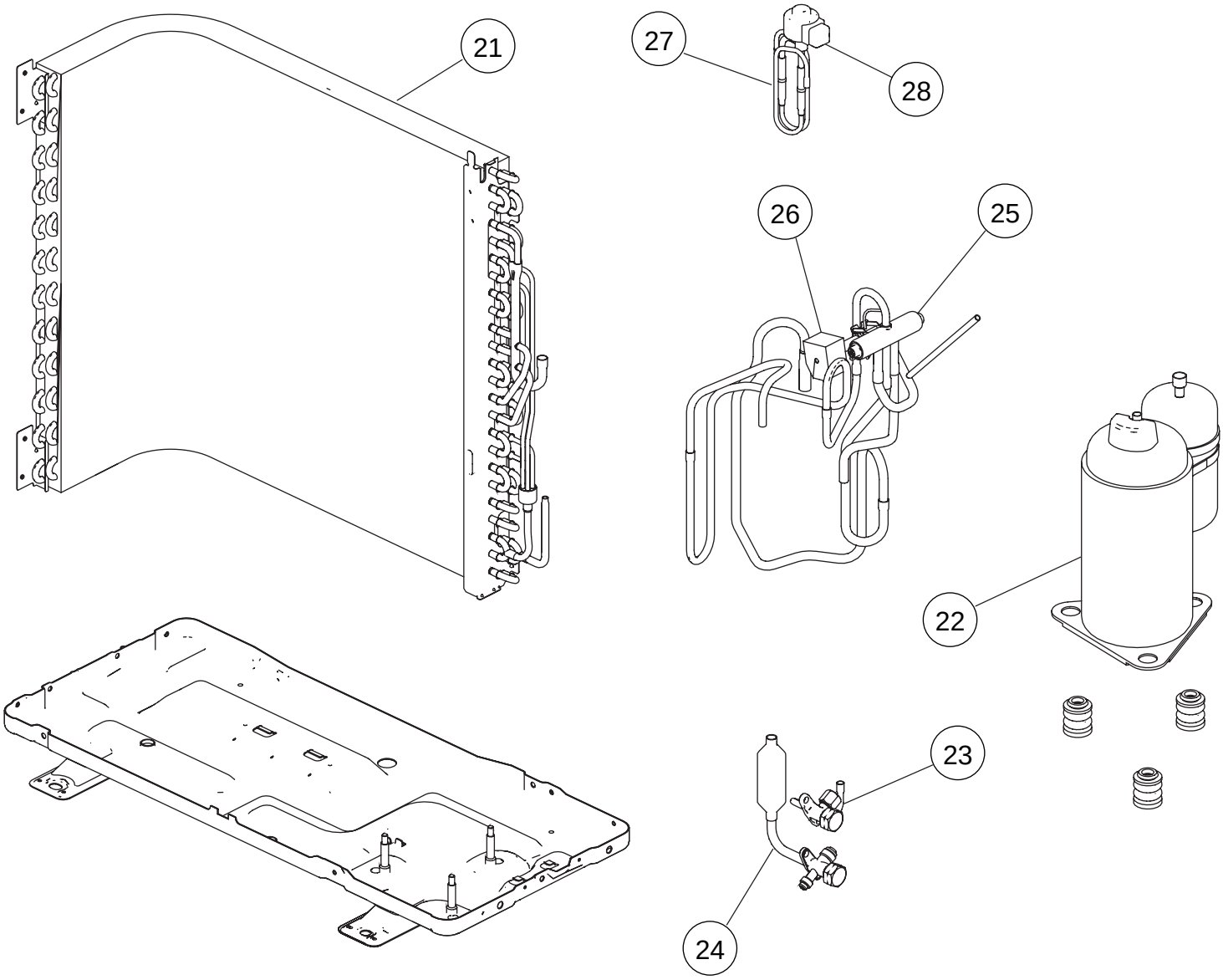

Ref.	Description	Part number	
21	Condenser Total Assy	9332359015	
22	Compressor Assy	9317619004	
23	2 way Valve Assy	9332371000	
24	3 way Valve Sub Assy	9317109000	
25	4 way Valve Assy	9332365009	
26	Solenoid	9970110023	
27	Pulse Motor Valve Assy	9332368048	
28	Expansion Valve Coil	9970095030	

OUTDOOR UNIT
AOTG12LVCC

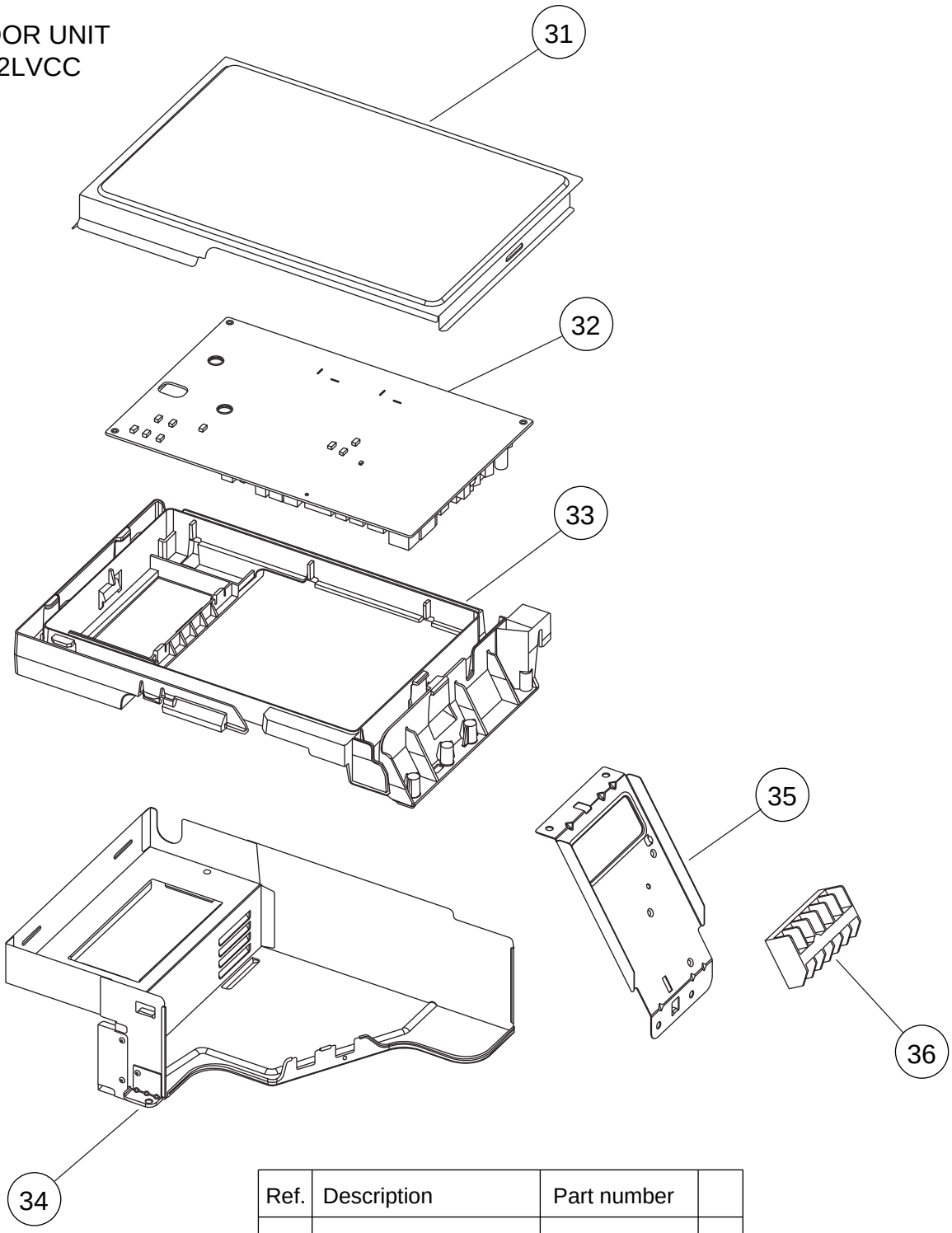

Ref.	Description	Part number	
31	Sealed Panel	9318181005	
32	Main PCB	9708682211	
33	PCB Holder	9318182019	
34	Inverter Case Assy	9318242010	
35	Terminal Bracket	9317603034	
36	Terminal	9900435028	
--	Outdoor Thermistor	9900565008	
--	Thermistor Assy	9900628000	
--	Heat Sink	9319070001	

ACCESSORIES

INDOOR UNIT

Name and Shape	Q'ty	Parts number
Bracket panel 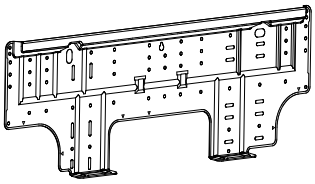	1	9318236019
Remote control 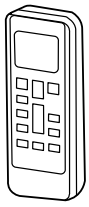	1	9379219006
Battery	2	0600185541
Remote control holder 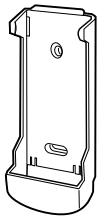	1	9305642045
Cloth tape 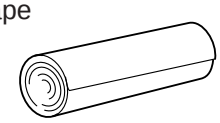	1	9310519004
Tapping screw (big) 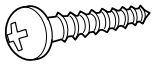	8	0700076046
Tapping screw (small) 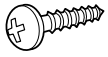	2	0700019036
Anti virus filter 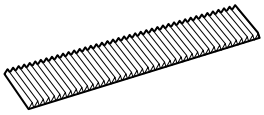	2	9318273007

Refer to each installation manual
for the method of installing optional parts.

Parts name	Model No.	Use
Wired remote control *	UTY-RNNYN	For air conditioner operation
Simple remote control *	UTY-RSNYN	For air conditioner operation
External connect kit *	UTY-XWZXZ5	For control input/output port
Communication kit	UTY-TWBXF	For the installation of optional parts

* Optional communication kit is necessary for the installation.

"Demand response" for outdoor unit

Parts list for demand control option PCB kit (optional parts)

Parts name	Q'ty	Use
Demand control option PCB, Option PCB holder	1	
Connector cable	1	For connecting the demand control option PCB
Cable ties with clips 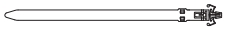	1	For fixing the signal transmission cable
Cable ties	2	For fixing the earth(ground) cable and the 4-way valve lead wire (09LVCC) For fixing the EMI core and the signal transmission cable
Tapping screw	1	For attaching the option PCB holder
EMI core 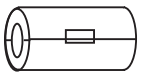	1	Attached to the signal transmission cable

1205G4083