FUJITSU

SPLIT TYPE
AIR CONDITIONER
DUCT TYPE (50Hz)

SERVICE MANUAL

Refrigerant
R410A

Indoor unit	Outdoor unit
ARTG54LHTC	AOTG54LCTL

CONTENTS

SPECIFICATIONS 1
DIMENSIONS. 2
REFRIGERANT SYSTEM DIAGRAM . . . 4
CIRCUIT DIAGRAM. 5
INDOOR PCB CIRCUIT DIAGRAM. 6
OUTDOOR PCB CIRCUIT DIAGRAM . .10
ERROR DETECTION. 17
PARTS (INDOOR UNIT) 21
PARTS (OUTDOOR UNIT) 24
ACCESSORIES. 27

FUJITSU GENERAL LIMITED

SPECIFICATIONS

ELECTRICAL DATA

TYPE		Cooling & Heating
INDOOR UNIT		ARTG54LHTC
OUTDOOR UNIT		AOTG54LCTL
COOLING CAPACITY		14.0 kW
HEATING CAPACITY		16.0 kW
POWER SOURCE		240 V, 50 Hz, single phase
RUNNING CURRENT	Cooling	18.4 A
	Heating	18.3 A
INPUT WATTS	Cooling	4.40 kW
	Heating	4.37 kW
E.E.R.	Cooling	3.18 kW/kW
C.O.P.	Heating	3.66 kW/kW
MOISTURE REMOVAL		1.5 L/hr
AIRCIRCULATION INDOOR		3,550 m3/h
AIRCIRCULATION OUTDOOR	Cooling	6,900 m3/h
	Heating	6,850 m3/h
MAXIMUM CURRENT		23.5 A

FAN MOTOR

INDOOR UNIT, Discrimination		MFG-54AVN
INDOOR UNIT Fan 1 / Fan 2	High	1,090 r.p.m. / 1,050 r.p.m.
	Medium	900 r.p.m. / 860 r.p.m.
	Low	780 r.p.m. / 740 r.p.m.
OUTDOOR UNIT, Discrimination		MFE-45VVT
OUTDOOR UNIT Cooling	Upper fan	900 r.p.m.
	Lower fan	800 r.p.m.
OUTDOOR UNIT Heating	Upper fan	850 r.p.m.
	Lower fan	830 r.p.m.

NOISE LEVEL

INDOOR UNIT	High	45 dB
	Medium	40 dB
	Low	36 dB
OUTDOOR UNIT	Cooling	55 dB
	Heating	57 dB

COMPRESSOR AND REFRIGERANT

TYPE		Hermetic type, Inverter, 4 poles, 3 phase, DC motor, Twin Rotary
DISCRIMINATION		DA422A3F-28ZAD
WEIGHT (with oil)		23.0 kg
REFRIGERANT TYPE		R410A
PRECHARGED REFRIGERANT		3,450 g
MAX PIPE HEIGHT		30 m
FULL CHARGE Pipe length	30 m	3,450 g
	45 m	4,200 g
	60 m	4,950 g
	75 m	5,700 g
ADDITIONAL CHARGE		50 g/m

DIMENSIONS

INDOOR UNIT	H x W x D	425 x 1,250 x 490 mm
OUTDOOR UNIT	H x W x D	1,290 x 900 x 330 mm

WEIGHT

INDOOR UNIT	Shipping / Net	61 kg / 54 kg
OUTDOOR UNIT	Shipping / Net	101 kg / 93 kg

DIMENSIONS

INDOOR UNIT
(unit : mm)

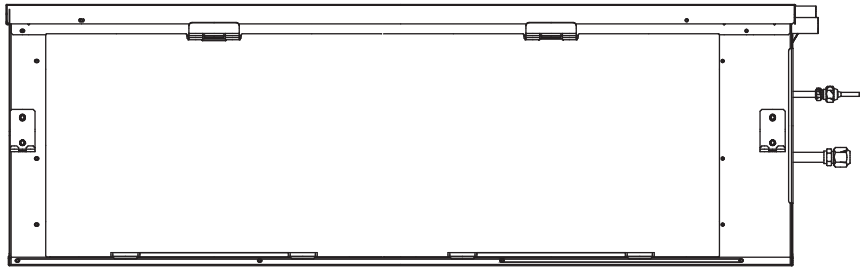

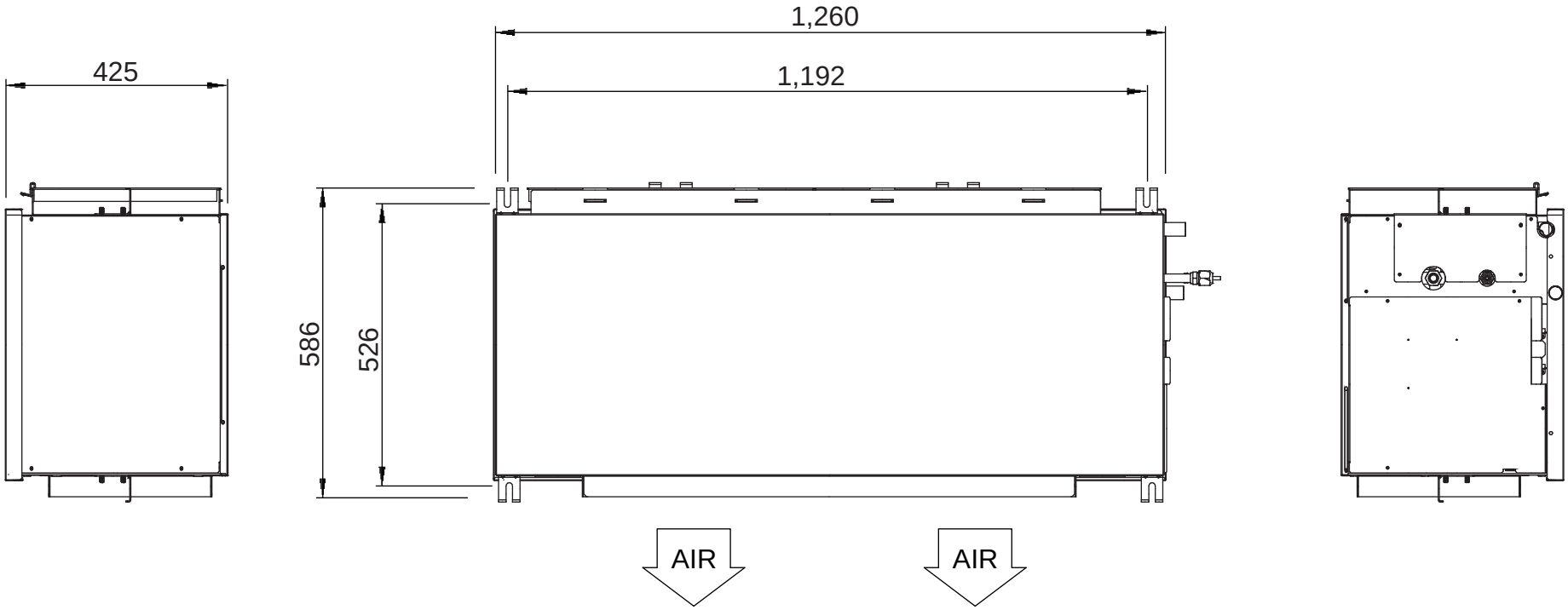

Drain hose diameter
Inside : 23.4 mm
Outside : 25.4 mm

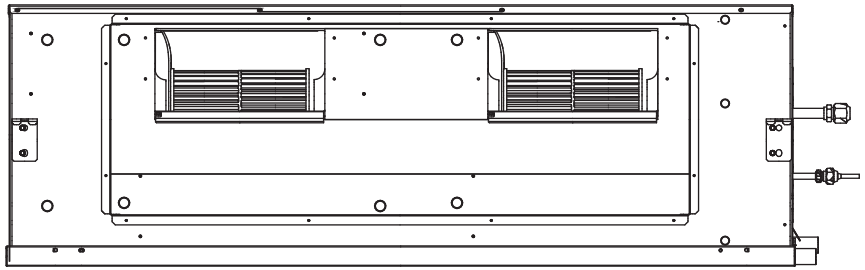

OUTDOOR UNIT
(unit : mm)

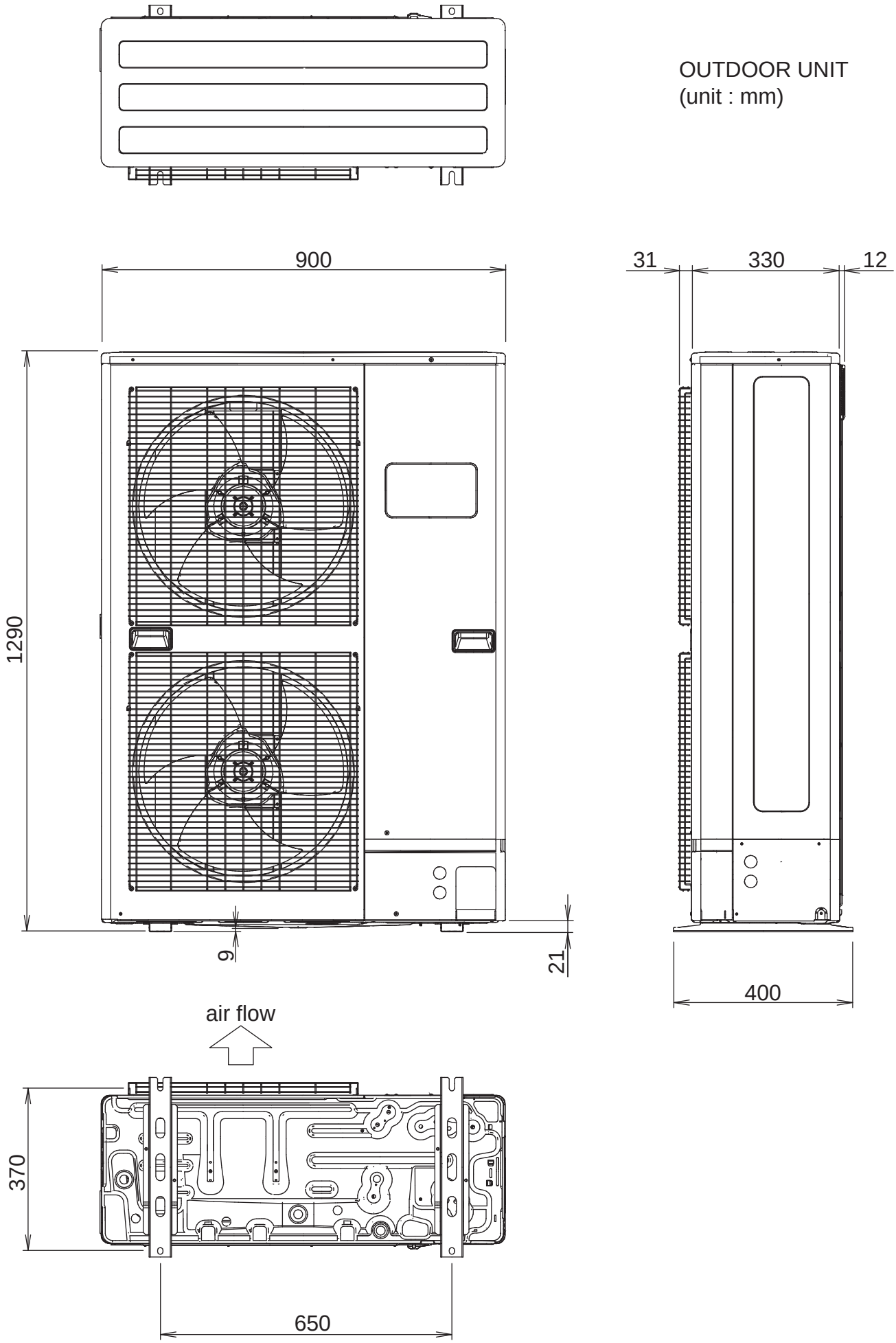

REFRIGERANT SYSTEM DIAGRAM

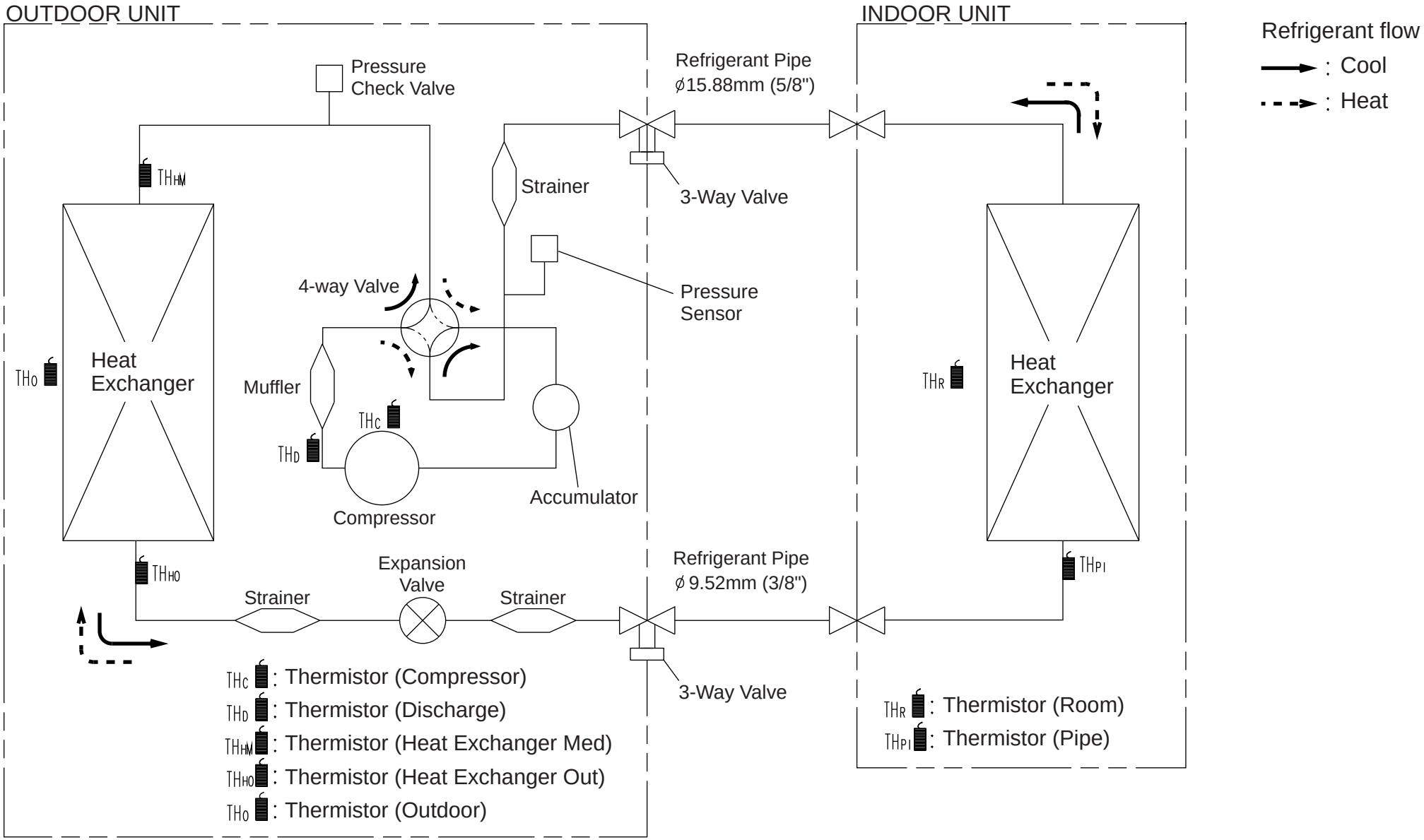

CIRCUIT DIAGRAM

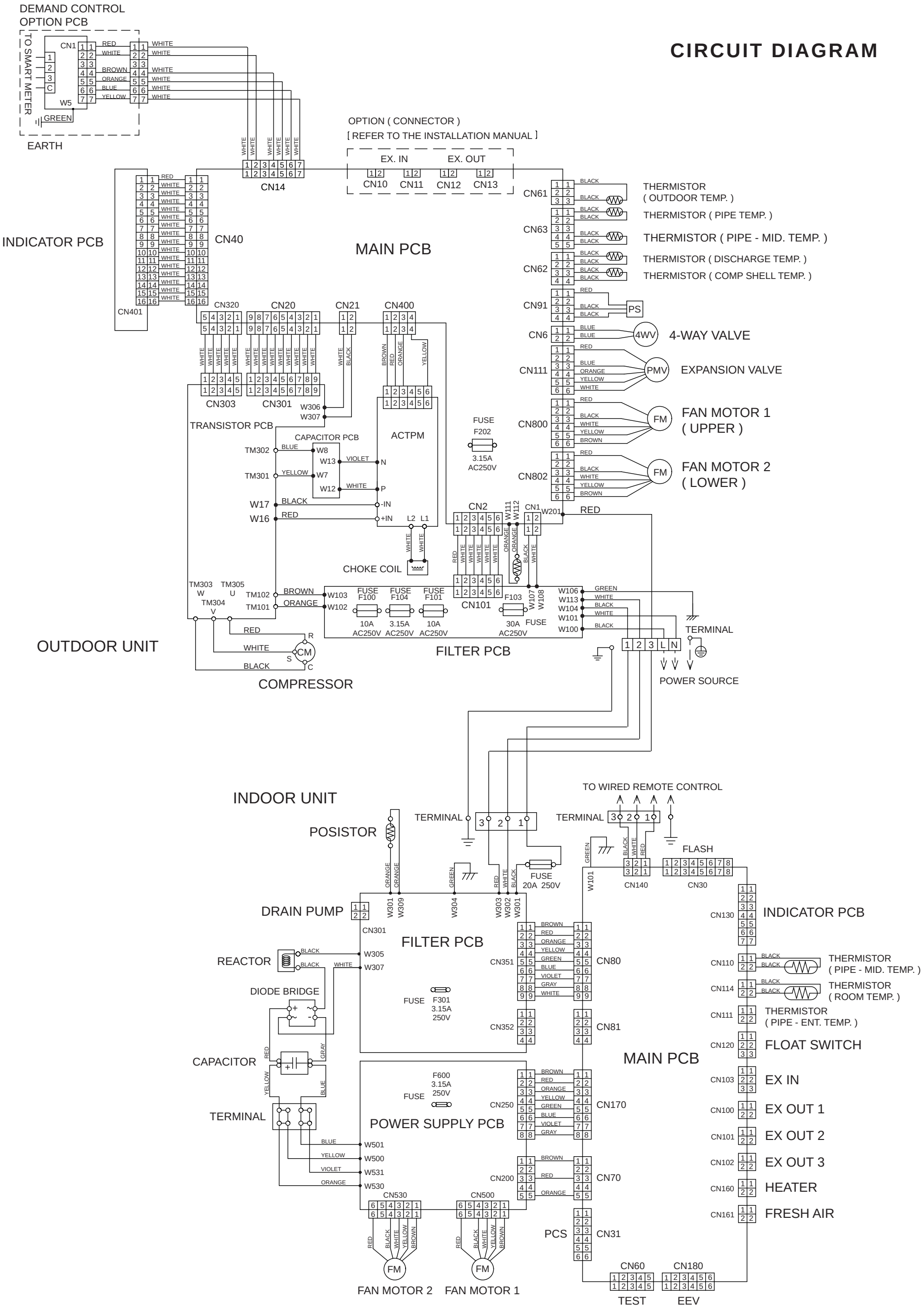

INDOOR PCB CIRCUIT DIAGRAM

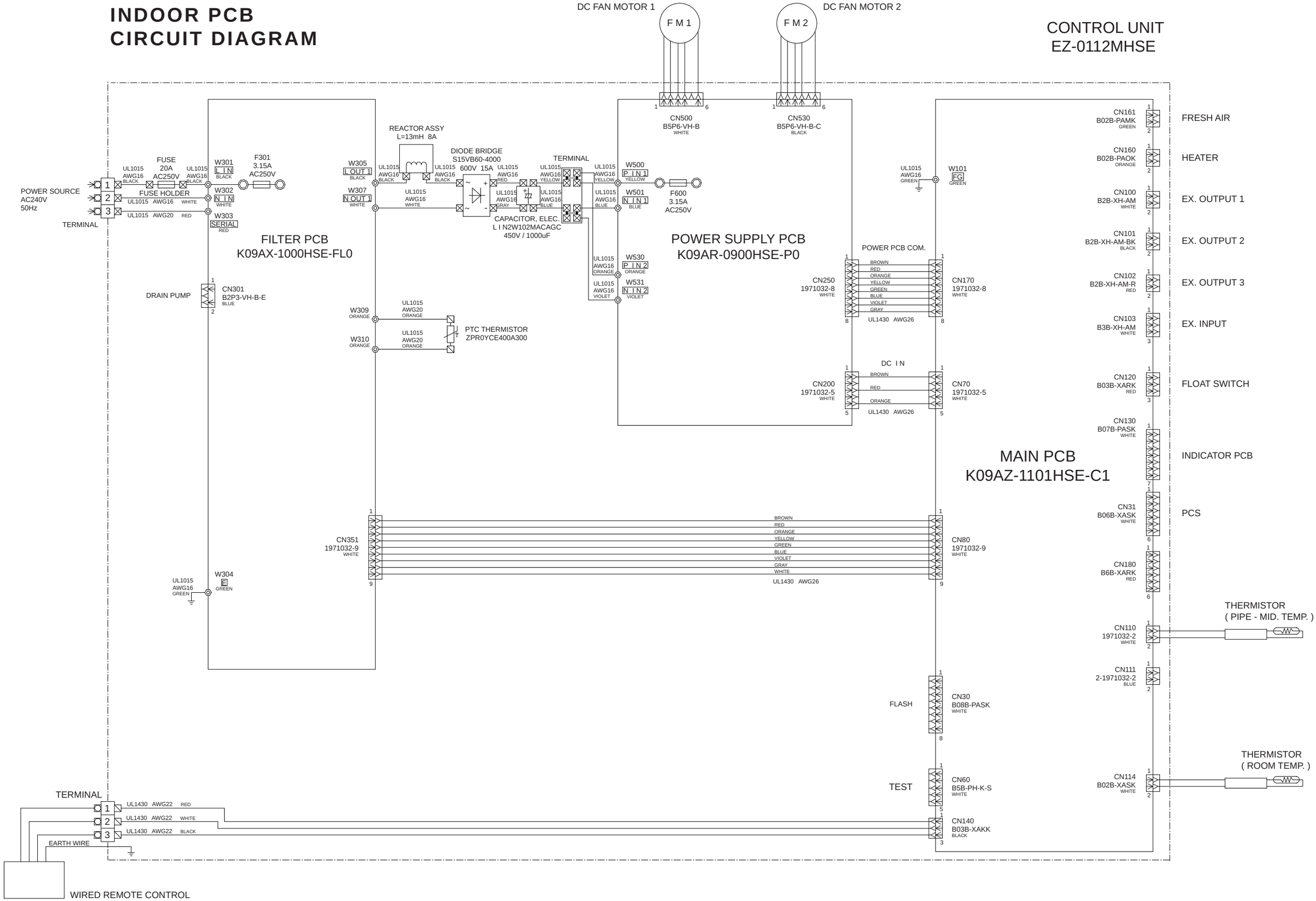

INDOOR UNIT
MAIN PCB : K09AZ-1101HSE-C1

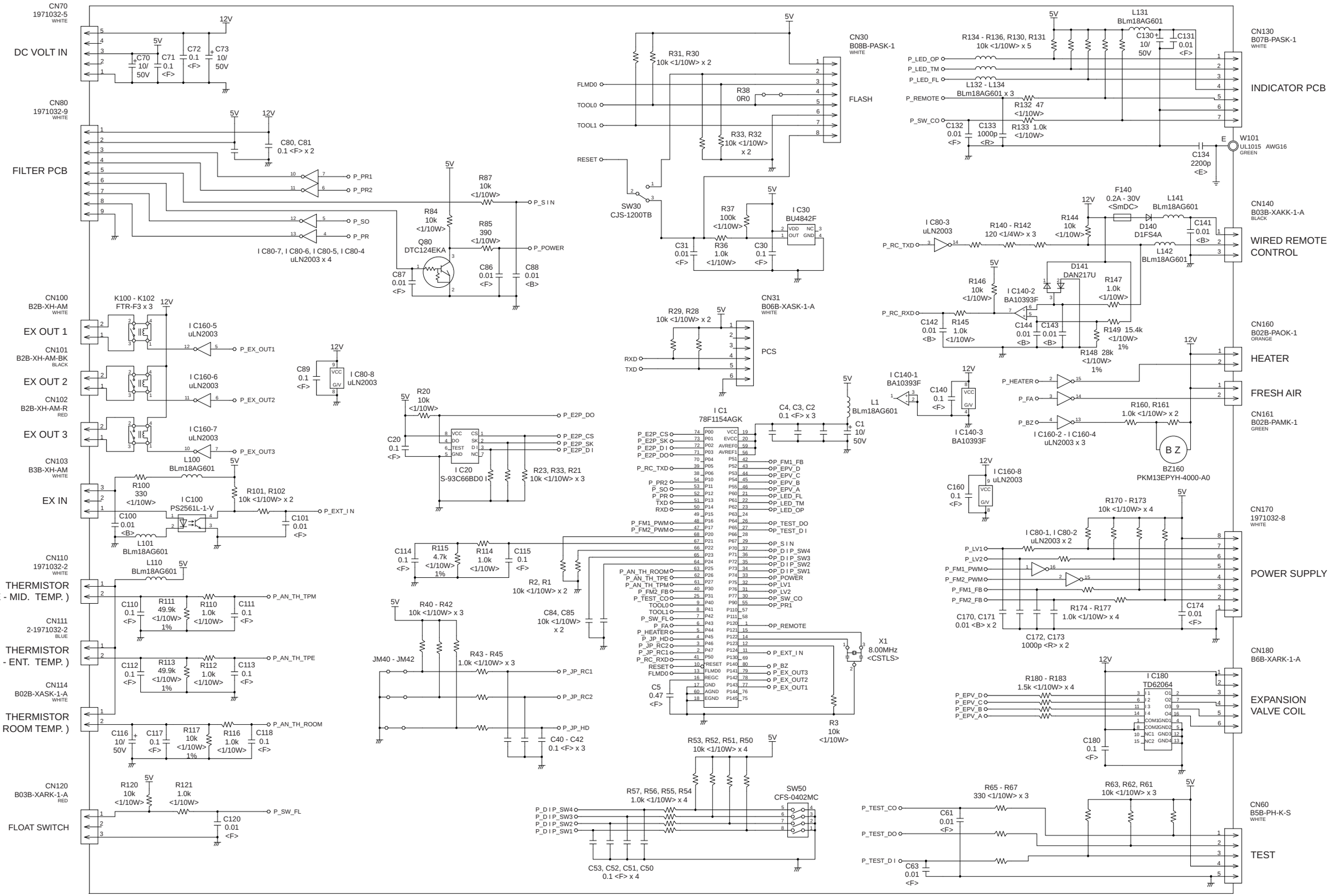

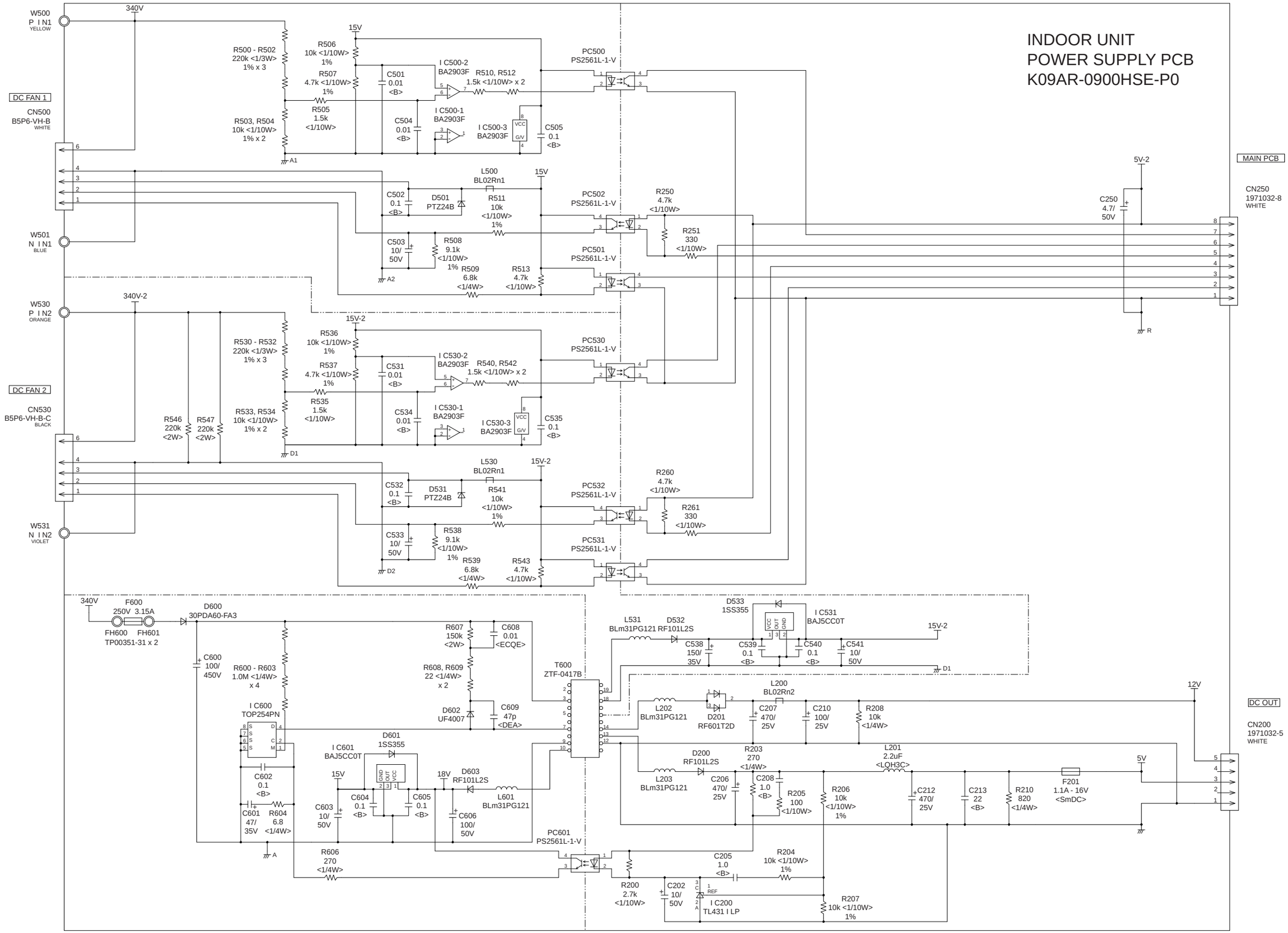
INDOOR UNIT
POWER SUPPLY PCB
K09AR-0900HSE-P0
W500
P I N1
YELLOW
340V
15V
R500 - R502
220k <1/3W>
1% x 3
R506
10k <1/10W>
1%
R507
4.7k <1/10W>
1%
C501
0.01
<B>
I C500-2
BA2903F
R510, R512
1.5k <1/10W> x 2
PC500
PS2561L-1-V
DC FAN 1
CN500
B5P6-VH-B
WHITE
R505
1.5k
<1/10W>
R503, R504
10k <1/10W>
1% x 2
C504
0.01
<B>
I C500-1
BA2903F
I C500-3
BA2903F
VCC
G/V
C505
0.1
<B>
A1
L500
BL02Rn1
C502
0.1
<B>
D501
PTZ24B
R511
10k
<1/10W>
1%
PC502
PS2561L-1-V
R250
4.7k
<1/10W>
R251
330
<1/10W>
W501
N I N1
BLUE
C503
10/
50V
R508
9.1k
<1/10W>
1%
A2
R509
6.8k
<1/4W>
R513
4.7k
<1/10W>
PC501
PS2561L-1-V
5V-2
C250
4.7/
50V
MAIN PCB
CN250
1971032-8
WHITE
R
W530
P I N2
ORANGE
340V-2
15V-2
R530 - R532
220k <1/3W>
1% x 3
R536
10k <1/10W>
1%
R537
4.7k <1/10W>
1%
C531
0.01
<B>
I C530-2
BA2903F
R540, R542
1.5k <1/10W> x 2
PC530
PS2561L-1-V
DC FAN 2
CN530
B5P6-VH-B-C
BLACK
R535
1.5k
<1/10W>
R533, R534
10k <1/10W>
1% x 2
R546
220k
<2W>
R547
220k
<2W>
C534
0.01
<B>
I C530-1
BA2903F
I C530-3
BA2903F
C535
0.1
<B>
D1
L530
BL02Rn1
C532
0.1
<B>
D531
PTZ24B
R541
10k
<1/10W>
1%
PC532
PS2561L-1-V
R260
4.7k
<1/10W>
R261
330
<1/10W>
W531
N I N2
VIOLET
C533
10/
50V
R538
9.1k
<1/10W>
1%
D2
R539
6.8k
<1/4W>
R543
4.7k
<1/10W>
PC531
PS2561L-1-V
340V
F600
250V 3.15A
FH600 FH601
TP00351-31 x 2
D600
30PDA60-FA3
C600
100/
450V
R600 - R603
1.0M <1/4W>
x 4
I C600
TOP254PN
R607
150k
<2W>
C608
0.01
<ECQE>
R608, R609
22 <1/4W>
x 2
D602
UF4007
C609
47p
<DEA>
T600
ZTF-0417B
L531
BLm31PG121
D532
RF101L2S
D533
1SS355
I C531
BAJ5CC0T
VCC
OUT
GND
C538
150/
35V
C539
0.1
<B>
C540
0.1
<B>
C541
10/
50V
15V-2
D1
L200
BL02Rn2
L202
BLm31PG121
D201
RF601T2D
C207
470/
25V
C210
100/
25V
R208
10k
<1/4W>
12V
DC OUT
CN200
1971032-5
WHITE
C602
0.1
<B>
C601
47/
35V
R604
6.8
<1/4W>
A
I C601
BAJ5CC0T
D601
1SS355
15V
C603
10/
50V
C604
0.1
<B>
C605
0.1
<B>
18V
D603
RF101L2S
L601
BLm31PG121
C606
100/
50V
D200
RF101L2S
R203
270
<1/4W>
L201
2.2uF
<LQH3C>
5V
L203
BLm31PG121
C206
470/
25V
C208
1.0
<B>
R205
100
<1/10W>
R206
10k
<1/10W>
1%
C212
470/
25V
C213
22
<B>
R210
820
<1/4W>
F201
1.1A - 16V
<SmDC>
PC601
PS2561L-1-V
R606
270
<1/4W>
C205
1.0
<B>
R204
10k <1/10W>
1%
R200
2.7k
<1/10W>
C202
10/
50V
I C200
TL431 I LP
REF
R207
10k <1/10W>
1%

INDOOR UNIT
FILTER PCB
K09AX-1000HSE-FL0

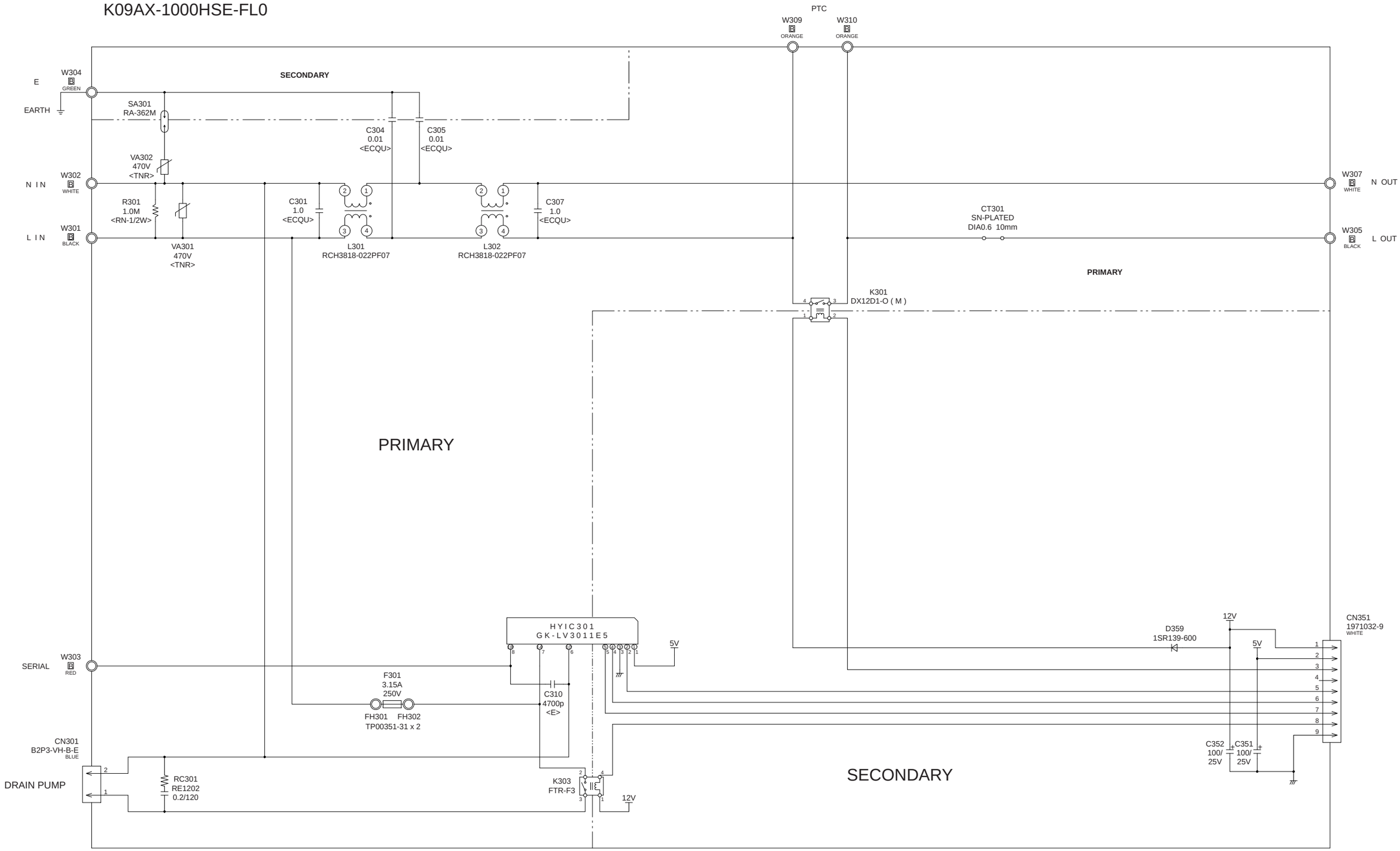

OUTDOOR PCB CIRCUIT DIAGRAM

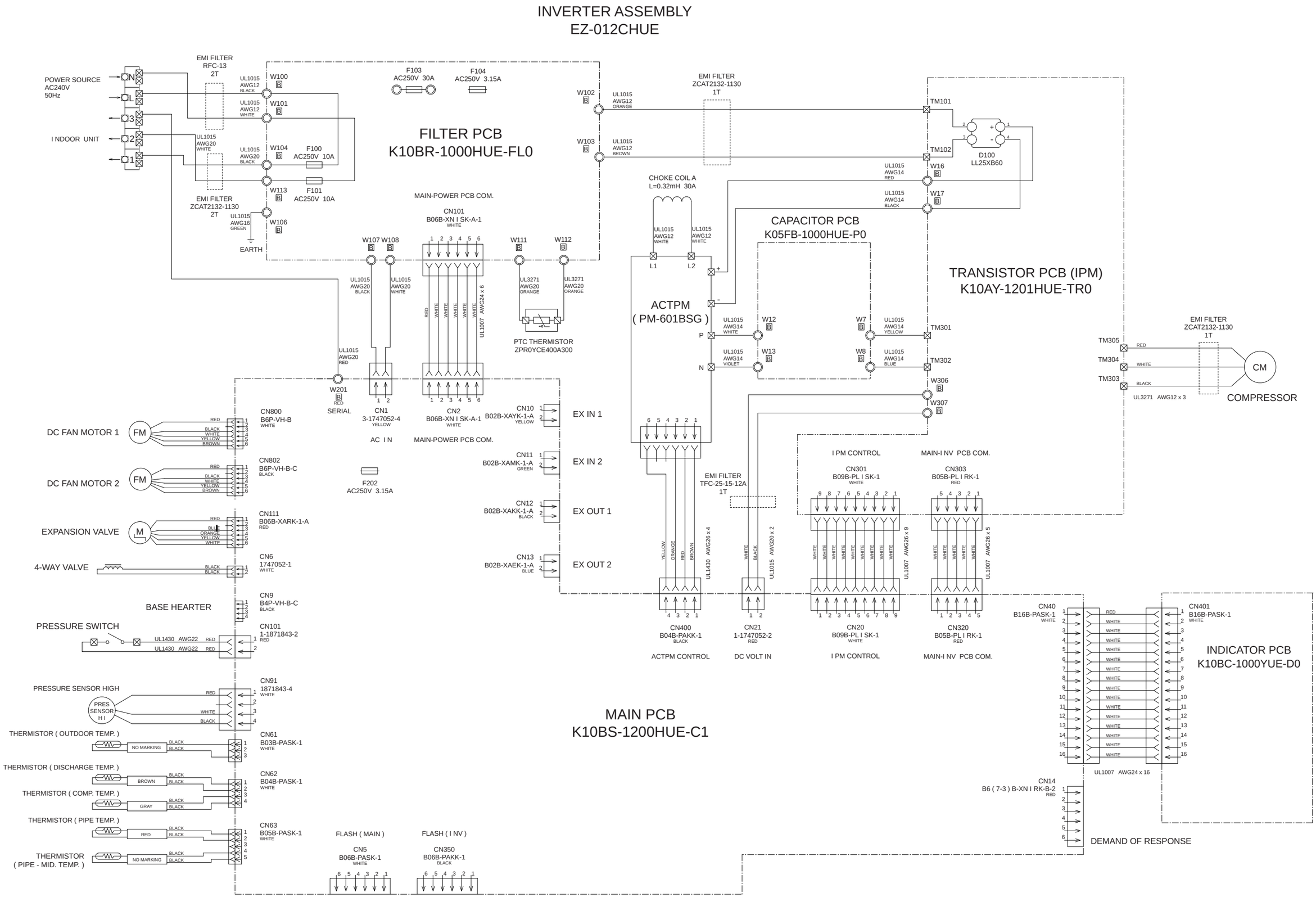

OUTDOOR UNIT
MAIN PCB - 1
K10BS-1200HUE-C1

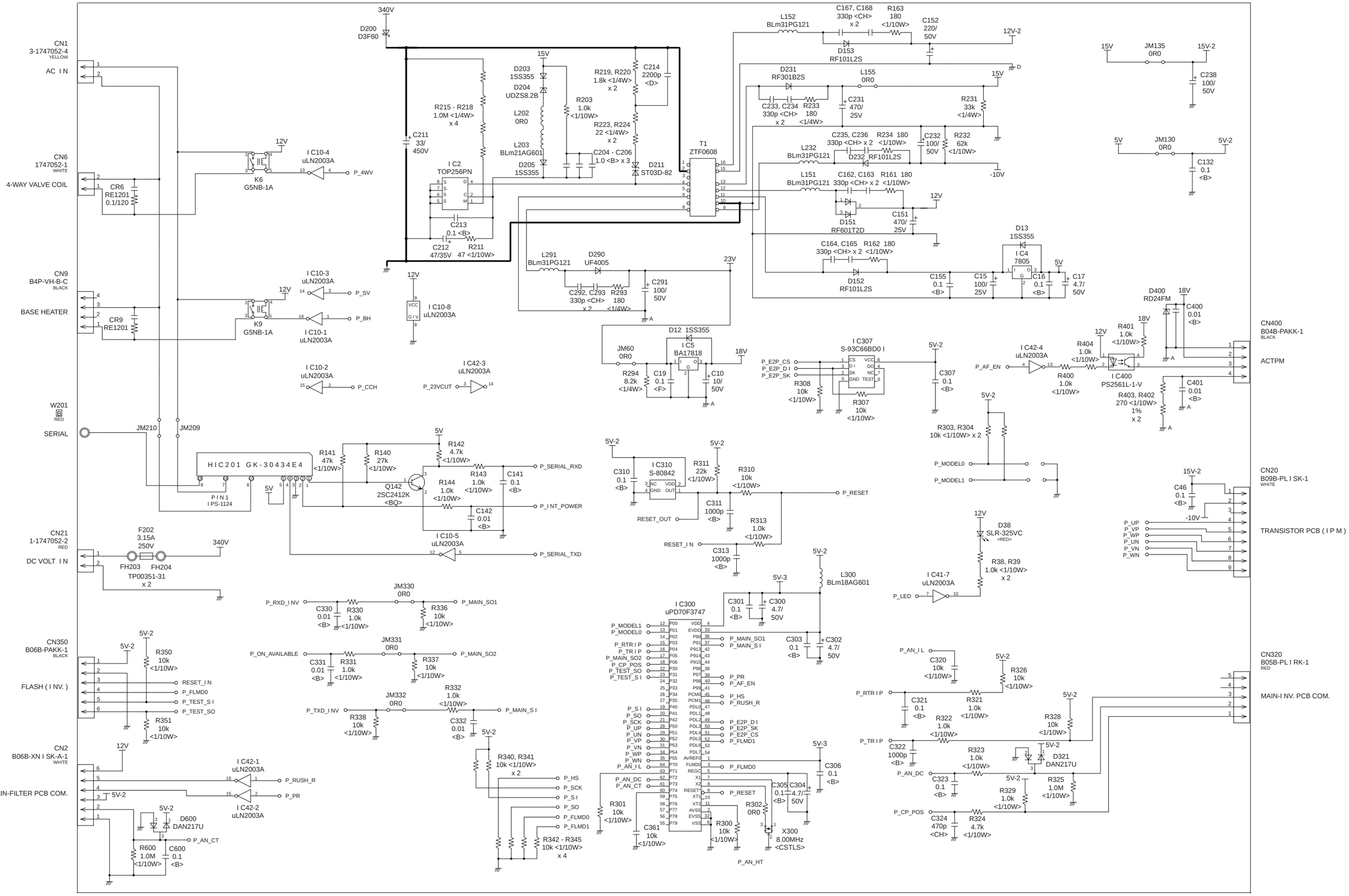

OUTDOOR UNIT
MAIN PCB - 2
K10BS-1200HUE-C1

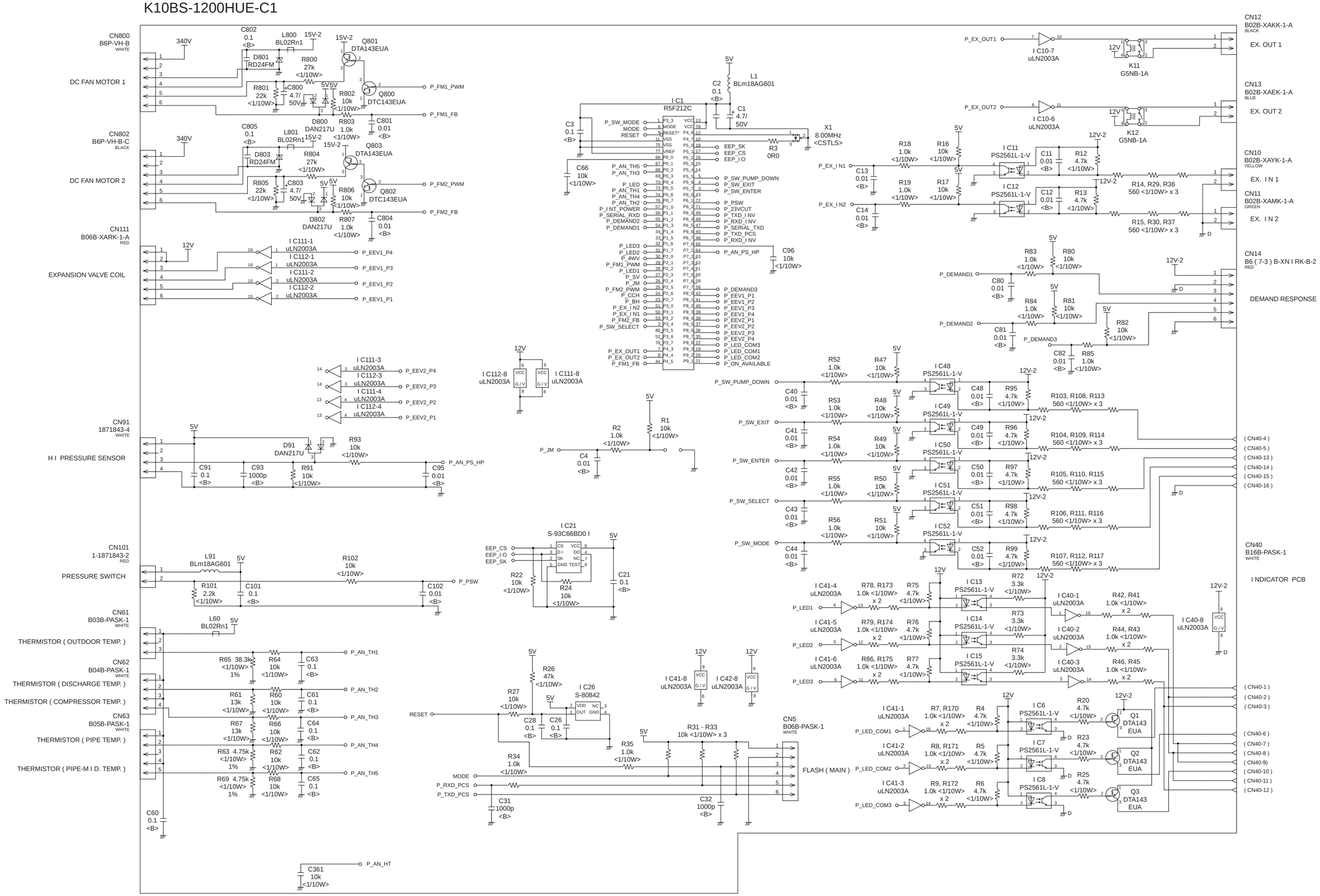

OUTDOOR UNIT
TRANSISTOR PCB (IPM)
K10AY-1201HUE-TR0

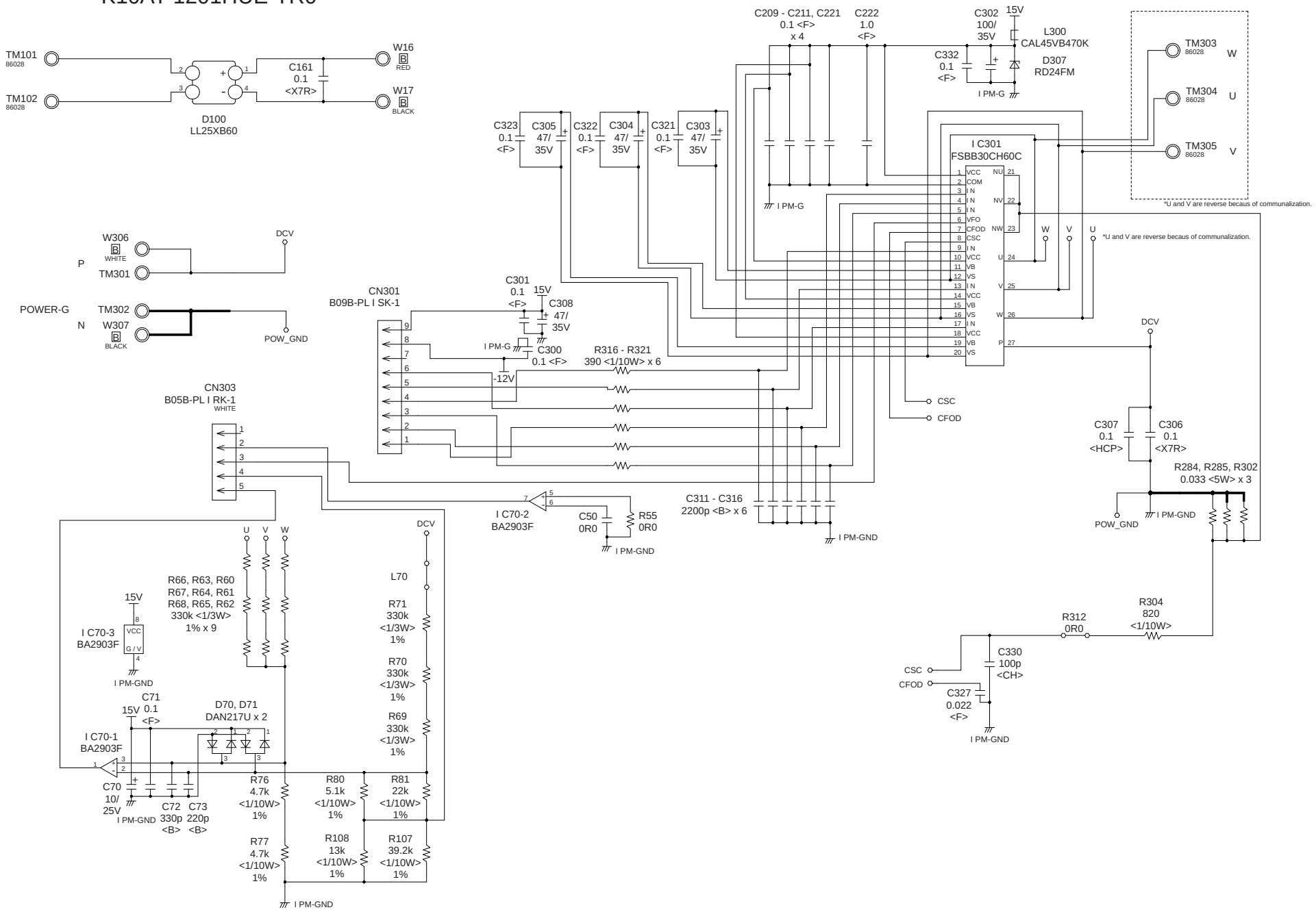

OUTDOOR UNIT
FILTER PCB
K10BR-1000HUE-FL0

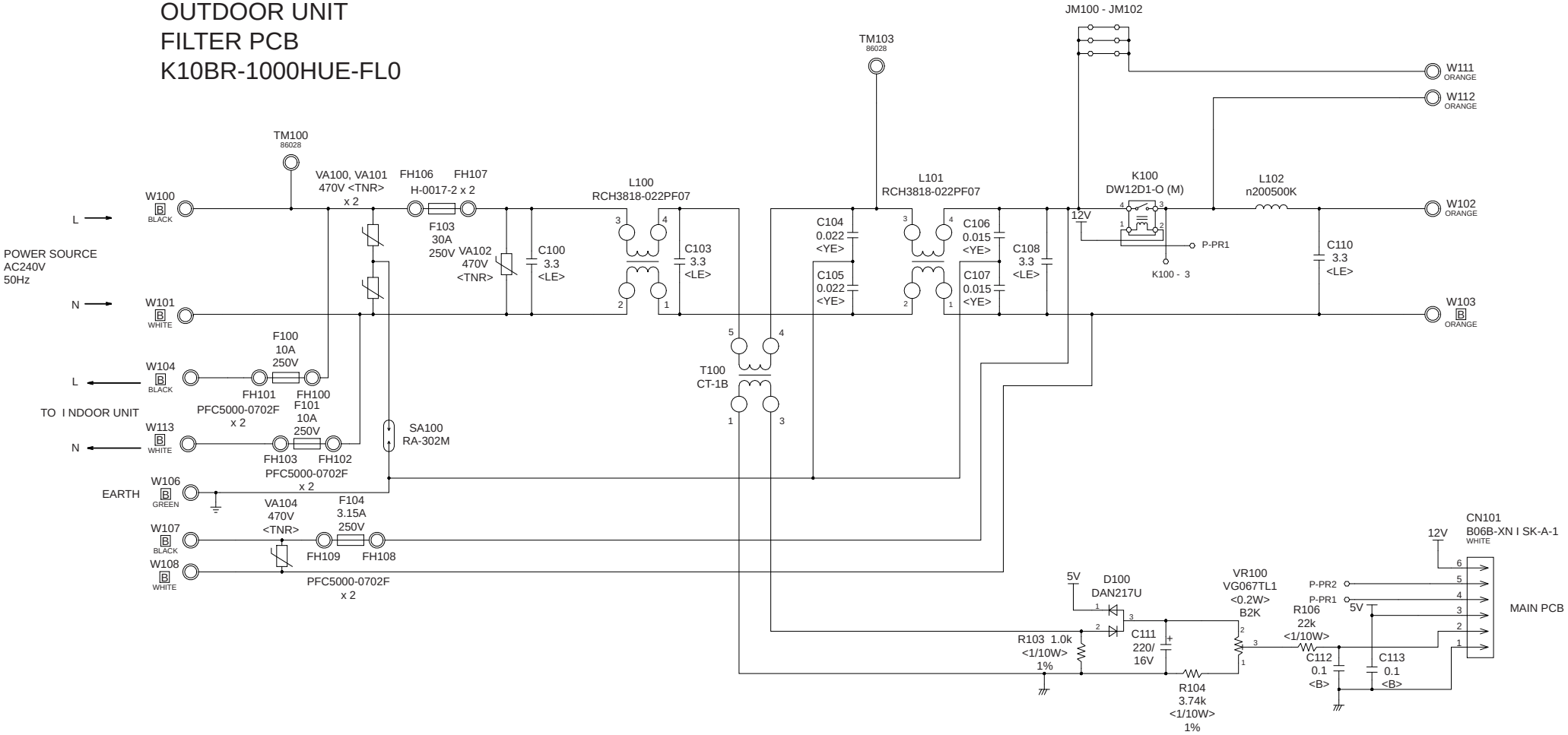

CAPACITOR PCB
K05FB-1000HUE-P0

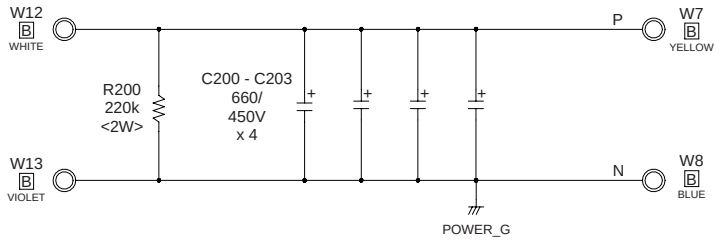

OUTDOOR UNIT
INDICATOR PCB
K10BC-1000YUE-D0

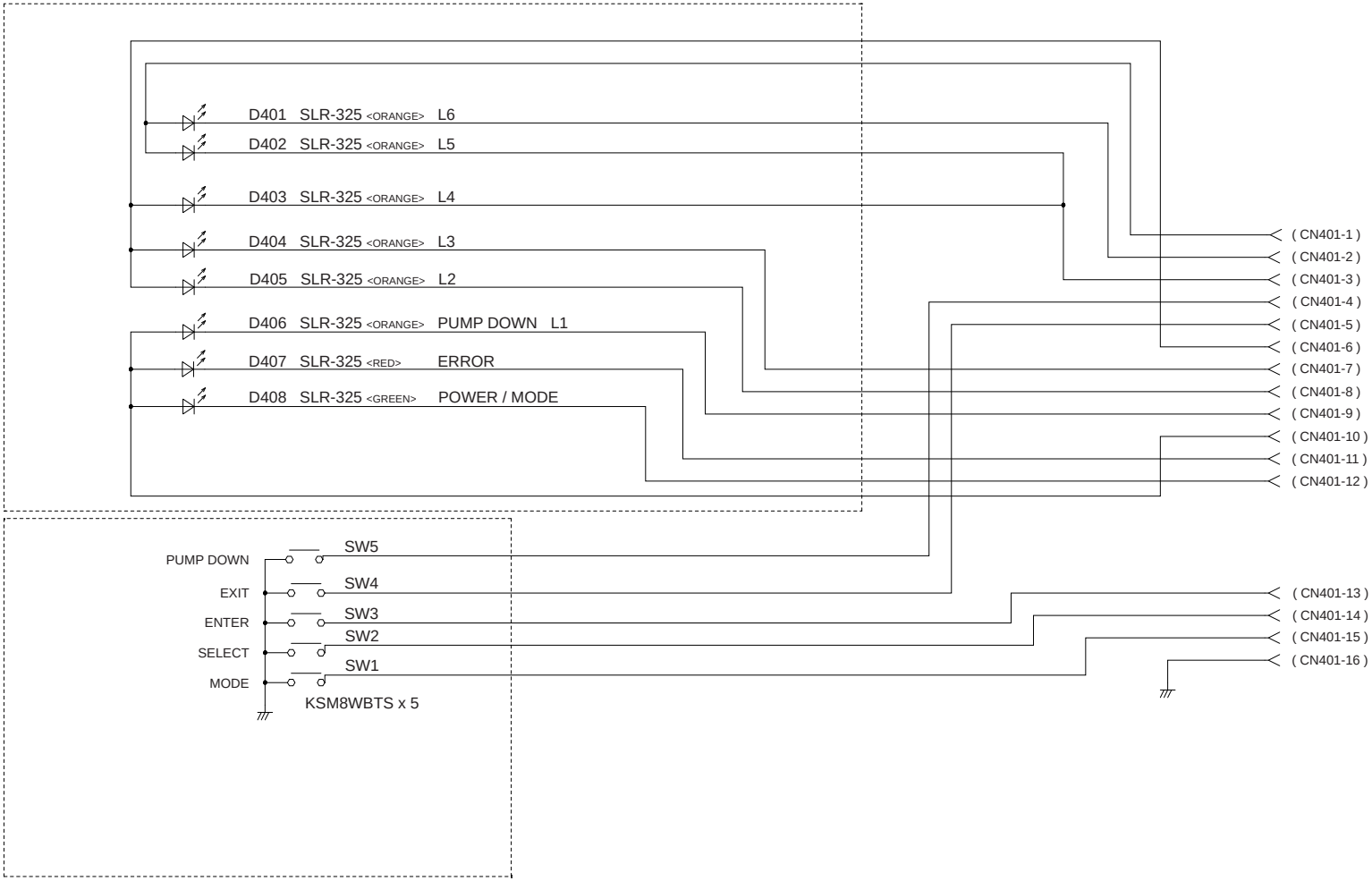

UTY-XCZZ4
DEMAND CONTROL OPTION PCB
K12GV-1201HUE-CA0

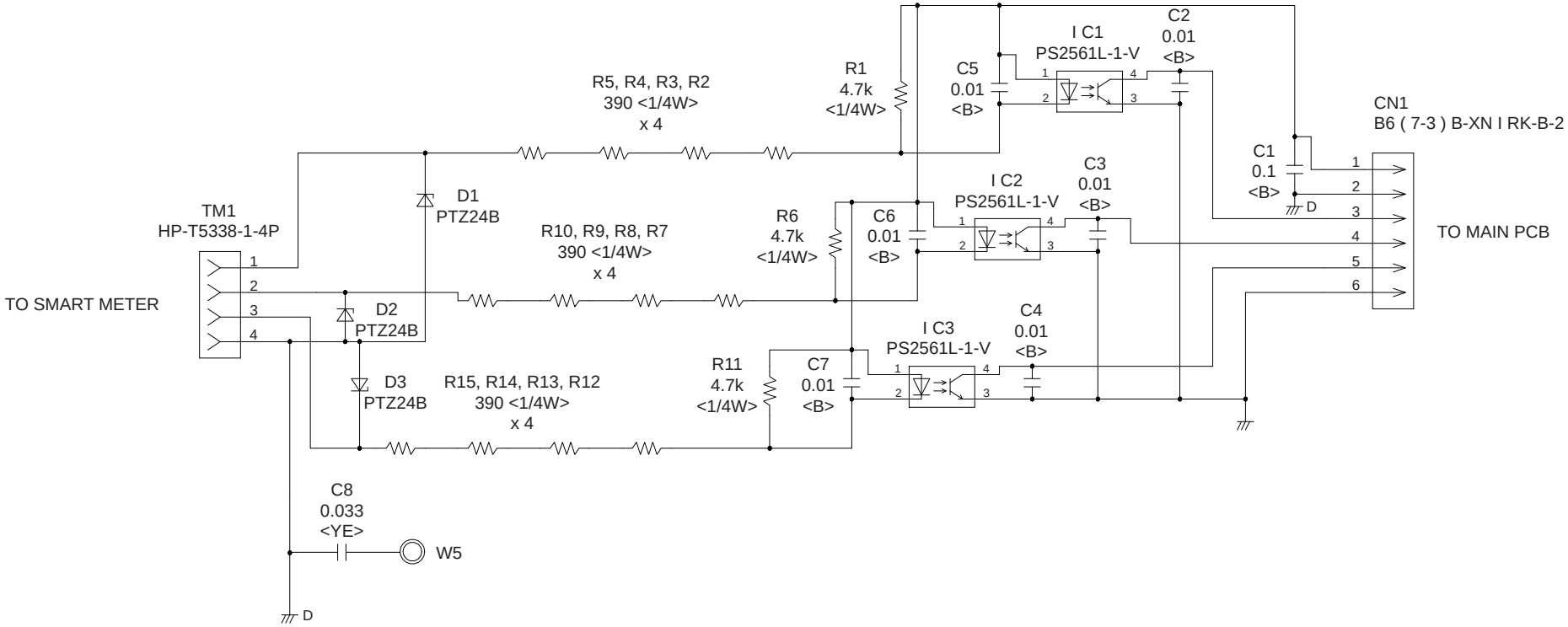

ERROR DETECTION

INDOOR UNIT and WIRED REMOTE CONTROL

If you use a wireless remote control, the lamp on the photo detector unit will output error codes by way of blinking patterns.
If you use a wired type remote control, error codes will appear on the remote control display. See the lamp blinking patterns and error codes in the table. An error display is displayed only during running.

Remote control

This is possible only on a wired remote control.
If an error occurs, the following display will be shown.
(“Er” will appear in the set room temperature display.)

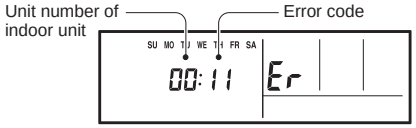

EX. Self-diagnosis

● : 0.5s on / 0.5s off

◇ : 0.1s on / 0.1s off

( ) : Number of flashing

Indoor unit			Wired remote control	Description
OPERATION lamp (green)	TIMER lamp (orange)	ECONOMY lamp (green)		
●(1)	●(1)	◇	11	Serial communication error
●(1)	●(2)	◇	12	Wired remote control communication error
●(1)	●(5)	◇	15	Check run unfinished
●(2)	●(1)	◇	21	Unit number or Refrigerant circuit address setting error [Simultaneous Multi]
●(2)	●(2)	◇	22	Indoor unit capacity error
●(2)	●(3)	◇	23	Combination error
●(2)	●(4)	◇	24	• Connection unit number error (indoor slave unit) [Simultaneous Multi] • Connection unit number error (indoor unit or branch unit) [Flexible Multi]
●(2)	●(7)	◇	27	Master unit, slave unit set-up error [Simultaneous Multi]
●(3)	●(1)	◇	31	Power supply interruption error
●(3)	●(2)	◇	32	Indoor unit PCB model information error
●(3)	●(5)	◇	35	Manual auto switch error
●(3)	●(9)	◇	39	Fan motor driving circuit error
●(4)	●(1)	◇	41	Inlet air temp. sensor error
●(4)	●(2)	◇	42	Indoor unit Heat Ex. Middle temp. sensor error
●(5)	●(1)	◇	51	Indoor unit fan motor error
●(5)	●(3)	◇	53	Drain pump error
●(5)	●(7)	◇	57	Damper error
●(5)	●(9)	◇	59	Indoor unit fan motor2 error
●(5)	●(15)	◇	5U	Indoor unit error
●(6)	●(2)	◇	62	Outdoor unit main PCB model information error or communication error
●(6)	●(3)	◇	63	Inverter error
●(6)	●(4)	◇	64	Active filter error, PFC circuit error
●(6)	●(5)	◇	65	Trip terminal Lerror

Indoor unit			Wired remote control	Description
OPERATION lamp (green)	TIMER lamp (orange)	ECONOMY lamp (green)		
●(6)	●(10)	◇	6A	Display PCB microcomputers communication error
●(7)	●(1)	◇	71	Discharge temp. sensor error
●(7)	●(2)	◇	72	Compressor temp. sensor error
●(7)	●(3)	◇	73	Outdoor unit Heat Ex. liquid temp. sensor error
●(7)	●(4)	◇	74	Outdoor temp. sensor error
●(7)	●(5)	◇	75	Suction Gas temp. sensor error
●(7)	●(6)	◇	76	• 2-way valve temp. sensor error • 3-way valve temp. sensor error
●(7)	●(7)	◇	77	Heat sink temp. sensor error
●(8)	●(2)	◇	82	• Sub-cool Heat Ex. gas inlet temp. sensor error • Sub-cool Heat Ex. gas outlet temp.sensor error
●(8)	●(3)	◇	83	Liquid pipe temp. sensor error
●(8)	●(4)	◇	84	Current sensor error
●(8)	●(6)	◇	86	• Discharge pressure sensor error • Suction pressure sensor error • High pressure switch error
●(9)	●(4)	◇	94	Trip detection
●(9)	●(5)	◇	95	Compressor rotor position detection error (permanent stop)
●(9)	●(7)	◇	97	Outdoor unit fan motor 1 error
●(9)	●(8)	◇	98	Outdoor unit fan motor 2 error
●(9)	●(9)	◇	99	4-way valve error
●(9)	●(10)	◇	9A	Coil (expansion valve) error
●(10)	●(1)	◇	A1	Discharge temp. error
●(10)	●(3)	◇	A3	Compressor temp. error
●(10)	●(4)	◇	A4	High pressure error
●(10)	●(5)	◇	A5	Low pressure error
●(13)	●(2)	◇	J2	Branch boxes error [Flexible Multi]

1. Pre-test run check items

Before the test operation, refer to the figure and check the following items.

☐ Is the outdoor unit securely installed?
☐ Have you performed gas leakage inspection? (Connection joints of various pipes (flang connection, brazing))
☐ Is the heat insulation done completely? (Gas pipe, liquid pipe, drain hose extension on indoor unit side, etc.)
☐ Is the water discharging from drain without any problems?
☐ Are the cables connected correctly?
☐ Are the cables as per specifications?
☐ Is the earth wire connected accurately?
☐ Are there any obstacles blocking the suction gate, and outlet of the indoor/outooor units?
☐ Have you filled the specified amount of refrigerant?
☐ Are the stop valves of gas pipe and liquid pipe fully open?
☐ Has the power been supplied to crankcase heater for more than 6 hours?

⇩ After checking that the above items are all in order, refer to “11.2. Test operation method” to test operation the unit. If there are problems, adjust immediately and recheck.

2. Test operation method

Be sure to conf gure test run settings only when the outdoor unit has stopped operating.

- Depending on the communication status between the indoor and outdoor units, it may take several minutes for the system to start operating after settings for the test run are complete.
- After the test run settings are complete, the outdoor units and the connected indoor units will start operating. Room temperature control will not activate during test operation (continuous operation).
- If a knocking sound can be heard in the liquid compression of the compressor, stop the unit immediately and then energize the crank case heater for a suff cient length of time before restarting the operation.

Test operation setting method (It can be performed in the following two ways)

- Set with test operation setting (refer to installation instructions manual of indoor unit for further details) available in the remote controller.
- “Cooling Operation” and “Heating Operation” can be set, using SELECT button and ENTER button available on the board of display unit.
  (*Make sure to perform the first test operation with cooling operation.)
  Set as per the procedure given below.

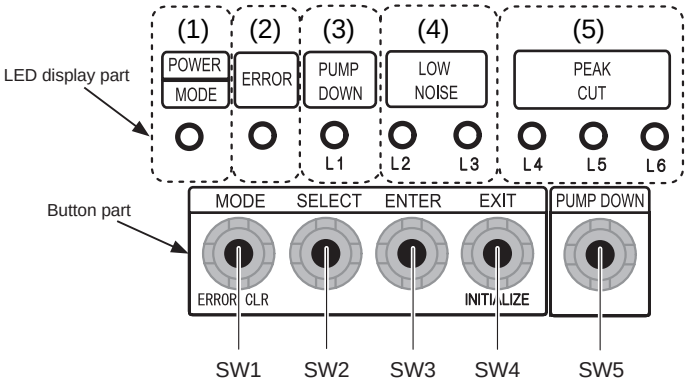

2.1. Setting method on outdoor unit board

(1) Turn on the power of the outdoor unit and enter standby mode.
“POWER/MODE” Lamp lights up.

POWER	ERROR	PUMP DOWN	LOW NOISE		PEAK CUT		
MODE		(L1)	(L2)	(L3)	(L4)	(L5)	(L6)
●	○	○	○	○	○	○	○

Sign “○”: Lights off, “●”: Lights on

(2) Press the ENTER button for more than 3 seconds.

POWER	ERROR	PUMP DOWN	LOW NOISE		PEAK CUT		
MODE		(L1)	(L2)	(L3)	(L4)	(L5)	(L6)
Blink	○	○	○	Blink	○	○	○

Sign “○”: Lights off, “●”: Lights on

(3) Press the SELECT button, LED of the test run mode switched between “COOL” and “HEAT”.
Cooling test mode

POWER	ERROR	PUMP DOWN	LOW NOISE		PEAK CUT		
MODE		(L1)	(L2)	(L3)	(L4)	(L5)	(L6)
Blink	○	○	○	Blink	○	○	○

Sign “○”: Lights off, “●”: Lights on

Heating test mode

POWER	ERROR	PUMP DOWN	LOW NOISE		PEAK CUT		
MODE		(L1)	(L2)	(L3)	(L4)	(L5)	(L6)
Blink	○	○	Blink	○	○	○	○

Sign “○”: Lights off, “●”: Lights on

(4) After confirming the operation mode, Press ENTER button
The display changes as follows, and air conditioner starts operation.
Cooling test mode

POWER	ERROR	PUMP DOWN	LOW NOISE		PEAK CUT		
MODE		(L1)	(L2)	(L3)	(L4)	(L5)	(L6)
Blink	○	○	○	●	○	○	○

Sign “○”: Lights off, “●”: Lights on

Heating test mode

POWER	ERROR	PUMP DOWN	LOW NOISE		PEAK CUT		
MODE		(L1)	(L2)	(L3)	(L4)	(L5)	(L6)
Blink	○	○	●	○	○	○	○

Sign “○”: Lights off, “●”: Lights on

(5) Press [ENTER] button.
Air conditioner stopped operation.

POWER	ERROR	PUMP DOWN	LOW NOISE		PEAK CUT		
MODE		(L1)	(L2)	(L3)	(L4)	(L5)	(L6)
●	○	○	○	○	○	○	○

Sign “○”: Lights off, “●”: Lights on

3. Check list

Check items during test operation.

☐ Is the outdoor unit making any abnormal noise or vibrating significantly?
☐ Is the cold air or hot air blowing from indoor unit according to the operation mode?
☐ Check that the “ERROR” LED blinks. If, it has displayed, check the error content as per 12.2. described later.
☐ Operate the unit according to the operating manual provided with the indoor unit, and check that it is operating normally.

OUTDOOR UNIT
ERROR CODE DISPLAY

You can determine the operating status by the lighting up and blinking of the LED lamp.

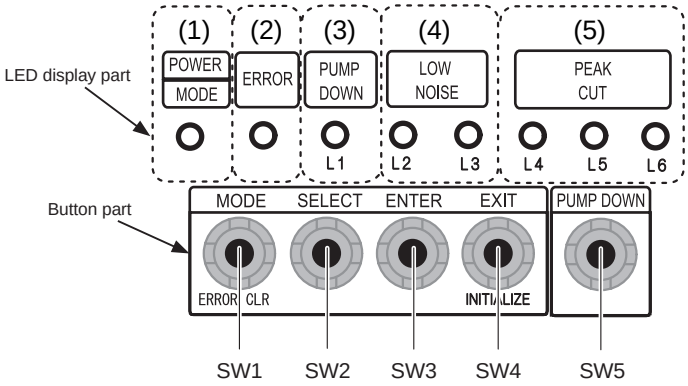

Display when an error occurs

POWER	ERROR	PUMP DOWN	LOW NOISE		PEAK CUT		
MODE		(L1)	(L2)	(L3)	(L4)	(L5)	(L6)
●	Blink (Hi speed)	○	○	○	○	○	○

Sign "○": Lights off, "●": Lights on

(1) Check that the "ERROR" LED blinks, then press the [Enter] button once.
(2) For details, refer to the following table.

Display mode ● : ON
○ : OFF
◆ : Blink (0.5s ON / 0.5s OFF)
( ) : Number of ßashing

Error code check table

LED display								DESCRIPTION	REMARK
POWER MODE	ERROR	PUMP DOWN	LOW NOISE		PEAK CUT				
		(L1)	(L2)	(L3)	(L4)	(L5)	(L6)		
◆(2)	●	◆(1)	◆(1)	○	○	●	●	Serial communication error	Serial forward transmission error immediately after operation
◆(2)	●	◆(1)	◆(1)	○	●	○	○		Serial forward transmission error during operation
◆(2)	●	◆(2)	◆(2)	○	○	○	●	Indoor unit capacity error	Indoor unit capacity error
◆(2)	●	◆(5)	◆(15)	○	○	○	●	Indoor unit error	Indoor unit error
◆(2)	●	◆(6)	◆(2)	○	○	○	●	Outdoor unit main PCB error	Outdoor unit PCB model information error
◆(2)	●	◆(6)	◆(3)	○	○	○	●	Inverter PCB error	Inverter error
◆(2)	●	◆(6)	◆(5)	○	○	●	●	IPM error	Trip terminal L error
◆(2)	●	◆(7)	◆(1)	○	○	○	●	Discharge temp. sensor error	Discharge temp. sensor 1 error
◆(2)	●	◆(7)	◆(2)	○	○	○	●	Compressor temp. sensor error	Compressor temp. sensor 1 error
◆(2)	●	◆(7)	◆(3)	○	○	●	○	Outdoor unit Heat Ex. sensor error	Heat Ex. middle temp. sensor error
◆(2)	●	◆(7)	◆(3)	○	○	●	●		Outdoor unit Heat Ex. liquid temp. sensor error
◆(2)	●	◆(7)	◆(4)	○	○	○	●	Outdoor temp. sensor error	Outdoor temp. sensor error
◆(2)	●	◆(7)	◆(7)	○	○	○	●	Heat sink temp. sensor error	Heat sink temp. sensor error
◆(2)	●	◆(8)	◆(4)	○	○	○	●	Current sensor error	Current sensor 1 error (stoppage permanently)
◆(2)	●	◆(8)	◆(6)	○	●	○	○	Pressure sensor error	High pressure switch 1 error
◆(2)	●	◆(8)	◆(6)	○	●	●	○		Pressure sensor error
◆(2)	●	◆(9)	◆(4)	○	○	○	●	Trip detection	Trip detection
◆(2)	●	◆(9)	◆(5)	○	○	○	●	Compressor motor control error	Rotor position detection error (stoppage permanently)
◆(2)	●	◆(9)	◆(7)	○	○	●	●	Outdoor unit fan motor 1 error	Duty error
◆(2)	●	◆(9)	◆(8)	○	○	●	●	Outdoor unit fan motor 2 error	Duty error
◆(2)	●	◆(9)	◆(9)	○	○	○	●	4-way valve error	4-way valve error
◆(2)	●	◆(10)	◆(1)	○	○	○	●	Discharge temp. 1 error	Discharge temp. 1 error
◆(2)	●	◆(10)	◆(3)	○	○	○	●	Compressor temp. error	Compressor 1 temp. error
◆(2)	●	◆(10)	◆(5)	○	○	○	●	Pressure error 2	Low pressure error

⚠ WARNING
Never touch electrical components such as the terminal blocks except the button on the display board. It may cause a serious accident such as electric shock.
During the pump-down operation, make sure that the compressor is turned off before you remove the refrigerant piping. Do not remove the connection pipe while the compressor is in operation with 2-way or 3-way valve open. This may cause abnormal pressure in the refrigeration cycle that leads to breakage and even injury.

⚠ CAUTION
Perform the pump down operation before disconnecting any refrigerant pipe or electric cable.
Collect refrigerant from the service port or the 3-way valve if pump down cannot be performed.
In case of a group control system installation, do not turn the power off pump down is completed in all outdoor units. (Group control system installation described in “SPECIAL INSTALLATION METHODS” in the installation manual of the indoor unit.)

- Operate [PUMP DOWN] button on the display board in the manner described below.

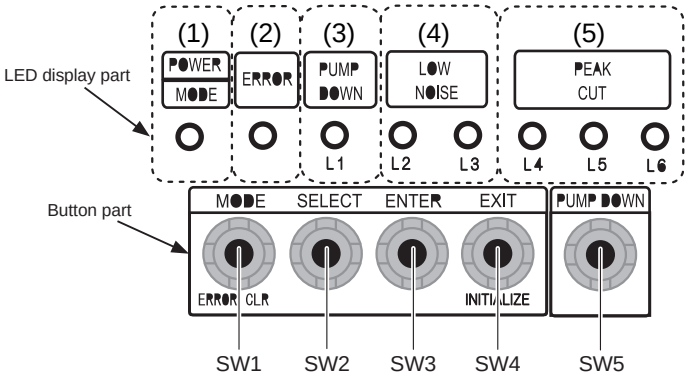

1. Preparation for pump down

Confirm that the power is off,
and then open the service panel.

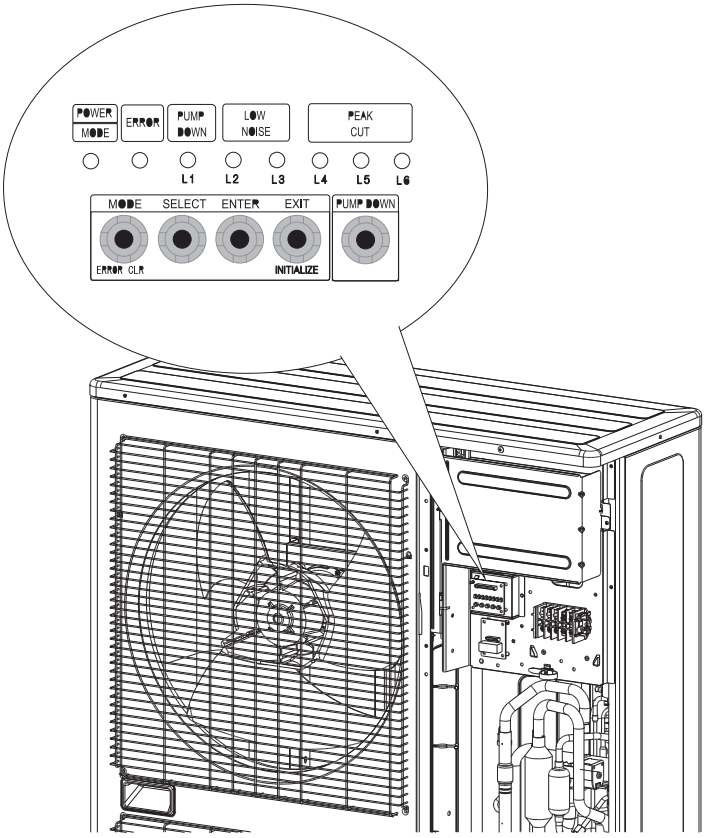

2. Pump down procedure

(1) Check the 3-way valves (both the liquid side and gas side) are opened.

(2) Turn the power on.

POWER	ERROR	PUMP DOWN	LOW NOISE		PEAK CUT		
MODE		(L1)	(L2)	(L3)	(L4)	(L5)	(L6)
●	○	○	○	○	○	○	○

Sign “○”: Lights off, “●”: Lights on

(3) Press [PUMP DOWN] button for 3 seconds or more after 3 minutes after power on.

POWER	ERROR	PUMP DOWN	LOW NOISE		PEAK CUT		
MODE		(L1)	(L2)	(L3)	(L4)	(L5)	(L6)
●	○	●	○	○	●	●	●

Sign “○”: Lights off, “●”: Lights on
LED display lights on as shown in the above figure, and the fans and the compressor start operating.

- If the [PUMP DOWN] button is pressed while the compressor is operating, the compressor will stop, then start again in about 3 minutes.

(4) LED display will change as shown below about 3 minutes after the compressor starts. Fully close the 3-way valve on the liquid pipe side at this stage.

POWER	ERROR	PUMP DOWN	LOW NOISE		PEAK CUT		
MODE		(L1)	(L2)	(L3)	(L4)	(L5)	(L6)
●	○	●	○	○	○	●	●

Sign “○”: Lights off, “●”: Lights on

- If the valve on the liquid pipe side is not closed, the pump down cannot be performed.

(5) When LED display changes as shown in the below figure, close the 3-way valve on the gas pipe side tightly.

POWER	ERROR	PUMP DOWN	LOW NOISE		PEAK CUT		
MODE		(L1)	(L2)	(L3)	(L4)	(L5)	(L6)
●	○	●	○	○	○	○	●

Sign “○”: Lights off, “●”: Lights on

- If the valve on the gas pipe side is not closed, refrigerant may flow into the piping after the compressor stops.

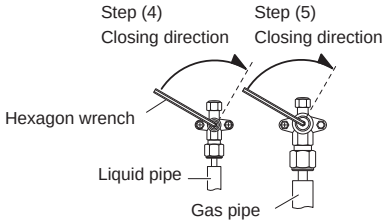

(6) LED display changes after 1 minute as shown in the figure below

POWER	ERROR	PUMP DOWN	LOW NOISE		PEAK CUT		
MODE		(L1)	(L2)	(L3)	(L4)	(L5)	(L6)
●	○	●	○	○	○	○	○

Sign “○”: Lights off, “●”: Lights on
Fans and compressor stop automatically.

- If the pump down is successfully completed (the above LED display is shown), the outdoor unit remains stopped until the power is turned off.

(7) Turn the power off.

POWER	ERROR	PUMP DOWN	LOW NOISE		PEAK CUT		
MODE		(L1)	(L2)	(L3)	(L4)	(L5)	(L6)
○	○	○	○	○	○	○	○

Sign “○”: Lights off

PUMP DOWN is completed.

(Note)
- To stop pump down, press the [PUMP DOWN] button again.
- To start the pump down again after the compressor is automatically stopped due to an error, turn the power off and open the 3-way valves. Wait 3 minutes, turn the power on and start the pump down again.
- When starting the operation after completion of the pump down, turn the power off, and then open the 3-way valves. Wait 3 minutes, turn the power on and perform a test run in the “COOL” operation mode.
- If an error occurs, recover the refrigerant from service port.

PARTS

INDOOR UNIT

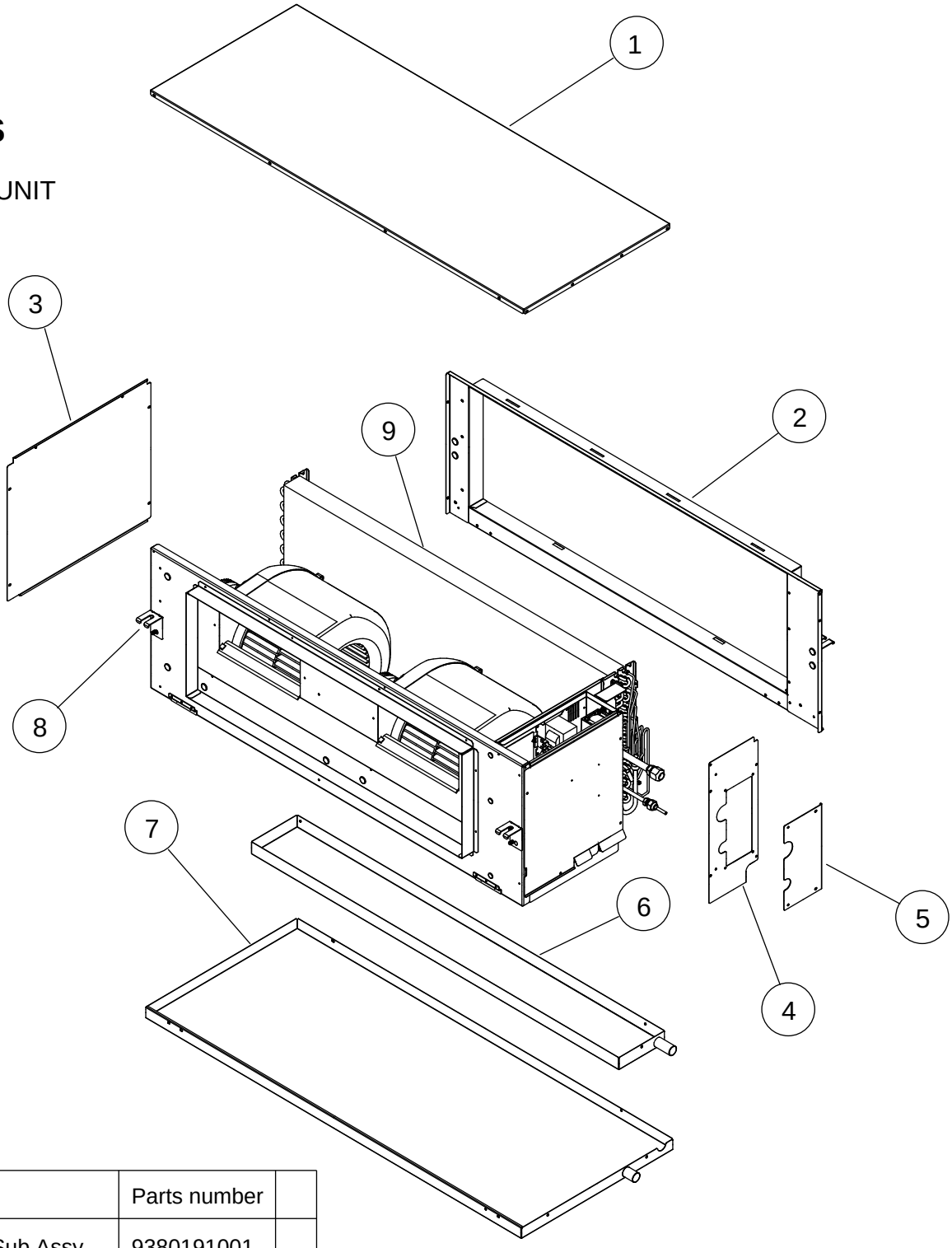

Ref.	Description	Parts number	
1	Panel Top Sub Assy	9380191001	
2	Panel Rear Sub Assy	9380205005	
3	Panel Side R Sub Assy	9380194002	
4	Panel Side L Sub Assy	9380203001	
5	Pipe Panel	9380262008	
6	Drain Pan Sub Assy	9380193005	
7	S Drain Pan Sub Assy	9380204008	
8	Hook	9372055007	
9	Evaporator Total Assy	9380206002	
10	Remote Control	9318593020	

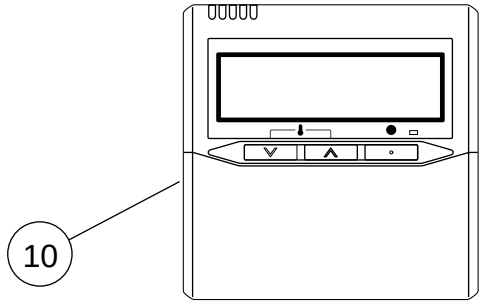

INDOOR UNIT

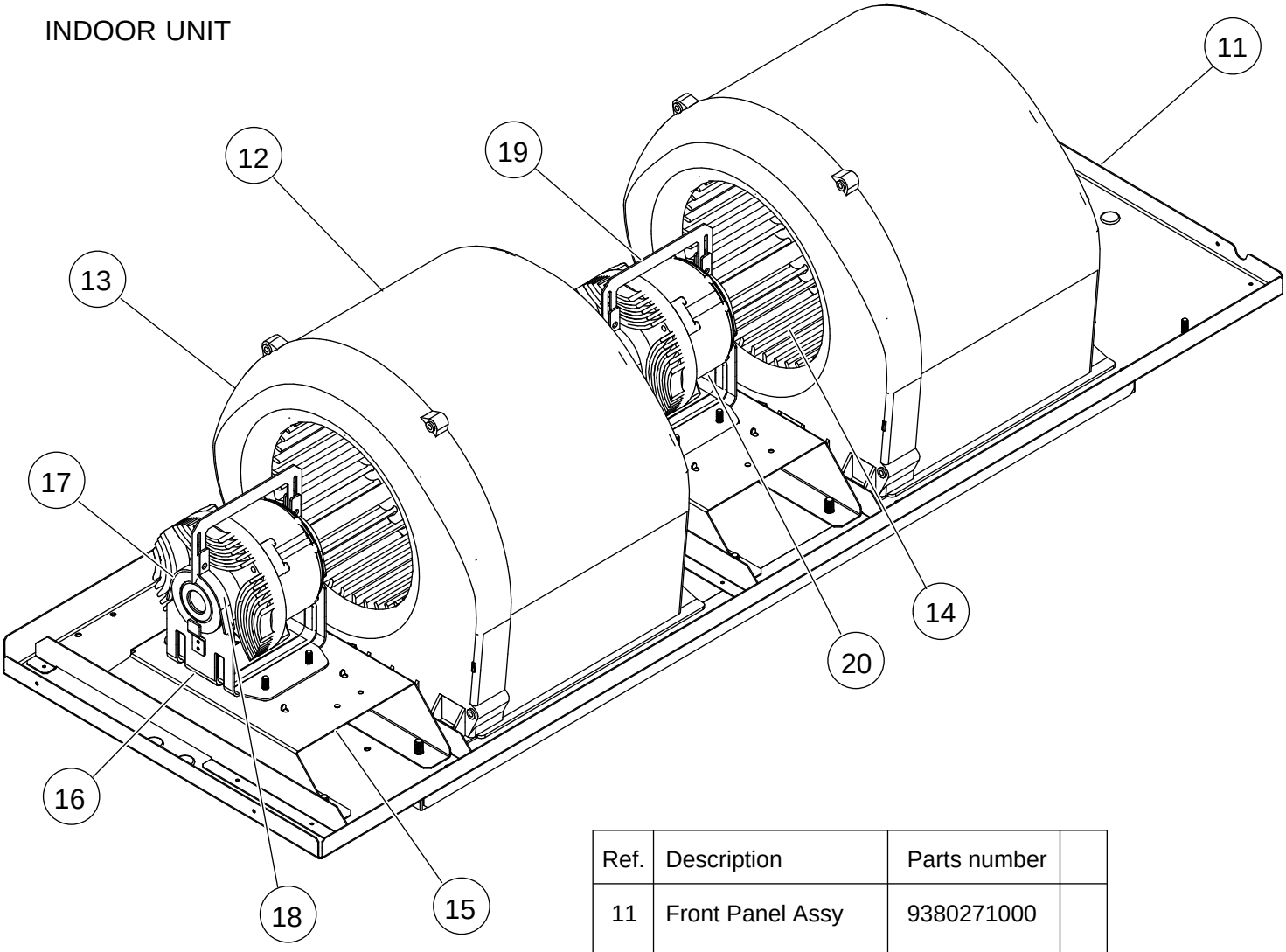

Ref.	Description	Parts number	
11	Front Panel Assy	9380271000	
12	Casing A	9372057018	
13	Casing B	9372058015	
14	Sirocco Fan	9372059029	
15	Bracket Motor Assy	9372037010	
16	Motor Mount Assy	9380216001	
17	Motor Band	9378031012	
18	Motor Band Assy	9378033016	
19	Motor Band RFM	9378003019	
20	Fan Motor	9603087012	

INDOOR UNIT

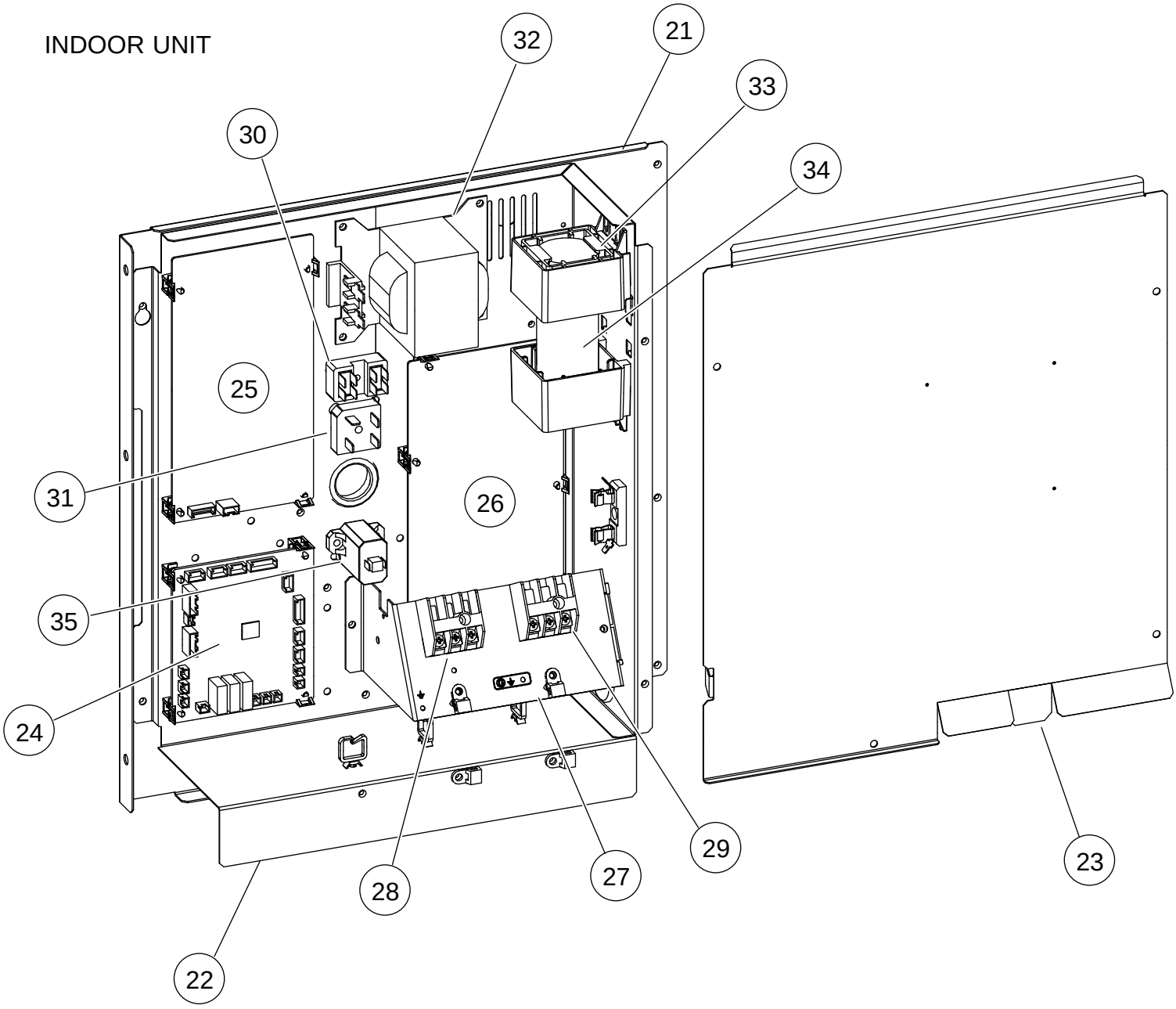

Ref.	Description	Parts number	
21	Seal Plate Sub Assy	9380195009	
22	Control Box Assy	9380254003	
23	Control Box Cover Sub Assy	9380309017	
24	Main PCB	9708281063	
25	Power Supply PCB	9708279015	
26	Filter PCB	9708277028	
27	Terminal Bracket	9380251002	
28	Terminal (Remote)	9900567002	
29	Terminal (Power)	9900568009	

Ref.	Description	Parts number	
30	Terminal	9900433017	
31	Diode (Power)	0000292917	
32	Reactor Assy	9900460013	
33	Capacitor Bracket	9373155010	
34	Capacitor	9704594013	
35	Thermistor	9704265012	
--	Pipe Thermistor	9900558000	
--	Room Thermistor	9703299254	

PARTS

OUTDOOR UNIT

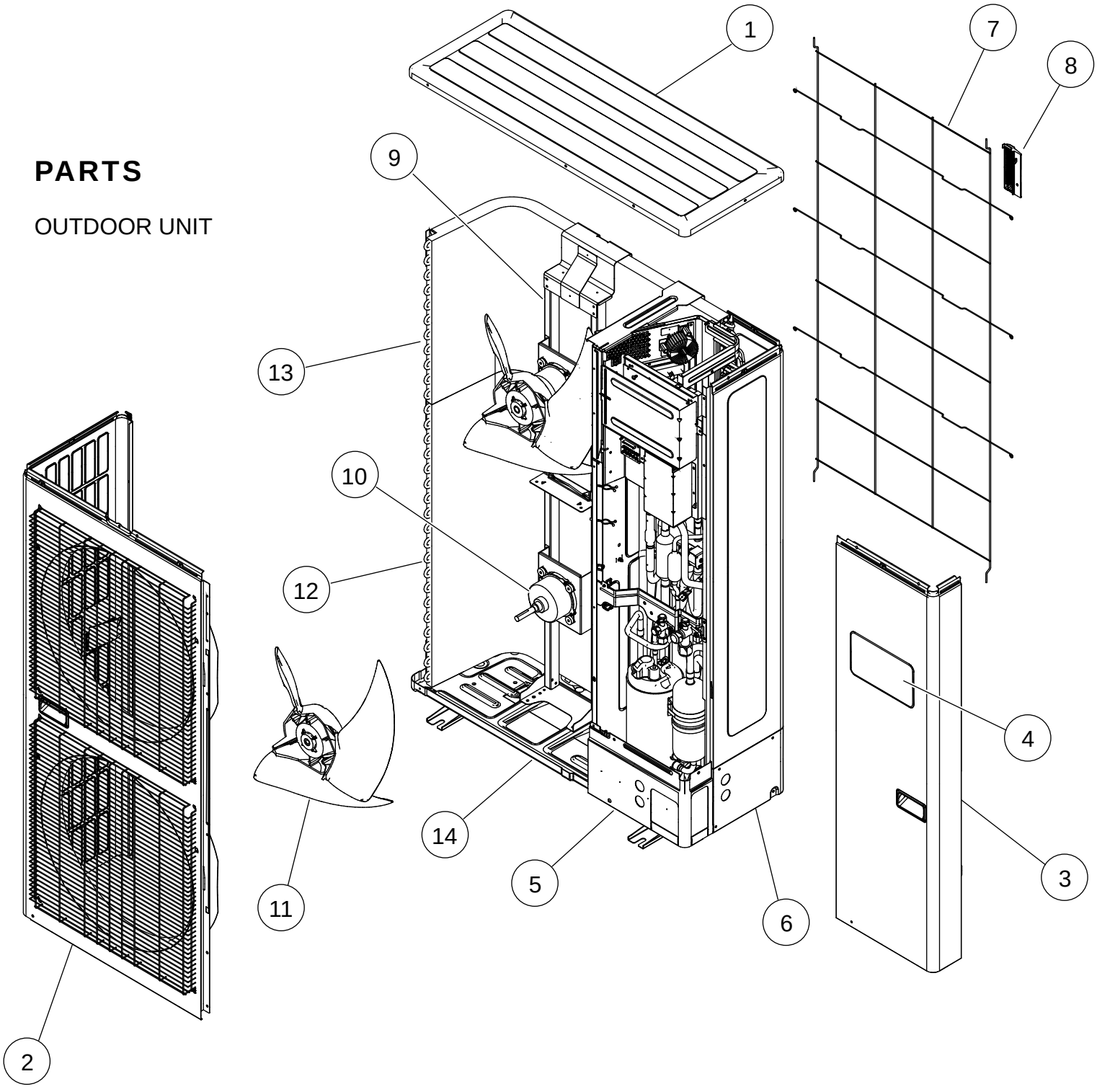

Ref.	Description	Parts number	
1	Top Panel Sub Assy	9374417056	
2	Front Panel Sub Assy	9374414109	
3	Sevice Panel Sub Assy	9374415090	
4	Emblem Rear	9351355005	
5	Pipe Cover Front	9378861015	
6	Right Panel Sub Assy	9374416226	
7	Protective Net	9375381042	
8	Thermo Holder	9375211011	

Ref.	Description	Parts number	
9	Motor Bracket Sub Assy	9374418169	
10	Motor DC Brushless	9602843039	
11	Propeller Fan Assy	9366378020	
12	Condenser A Sub Assy	9374420261	
13	Condenser B Sub Assy	9374422081	
14	Base Assy	9374166220	
--	Drain Assy	9303029015	
--	Drain Cap	313166024302	

OUTDOOR UNIT
Control box

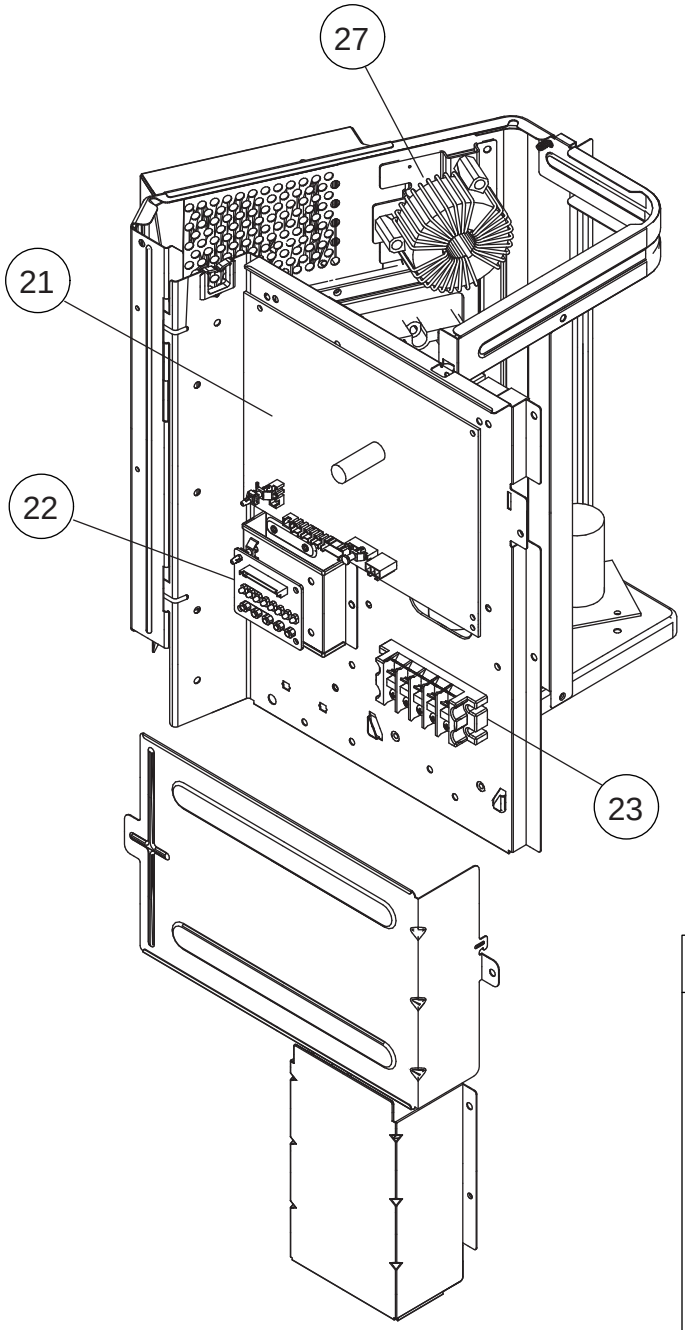

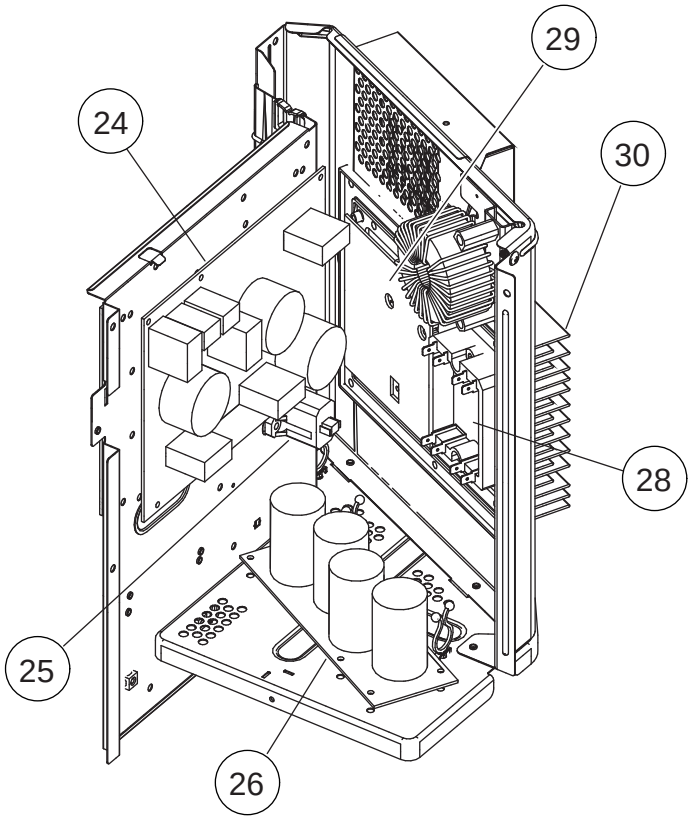

Ref.	Description	Parts number	
21	Main PCB	9708690117	
22	Indicator PCB	9708678016	
23	Terminal	9900203023	
24	Filter PCB	9708688015	
25	Thermistor	9704265012	
26	Capacitor PCB	9707257083	
27	Choke Coil	9900624019	
28	ACTPM	9707592016	
29	Transistor PCB	9708647135	
30	Heat Sink	9380358008	
--	Thermistor (Outdoor)	9900210069	
--	Thermistor Assy (5 pins)	9900599027	
--	Thermistor Assy (4 pins)	9900598013	

OUTDOOR UNIT

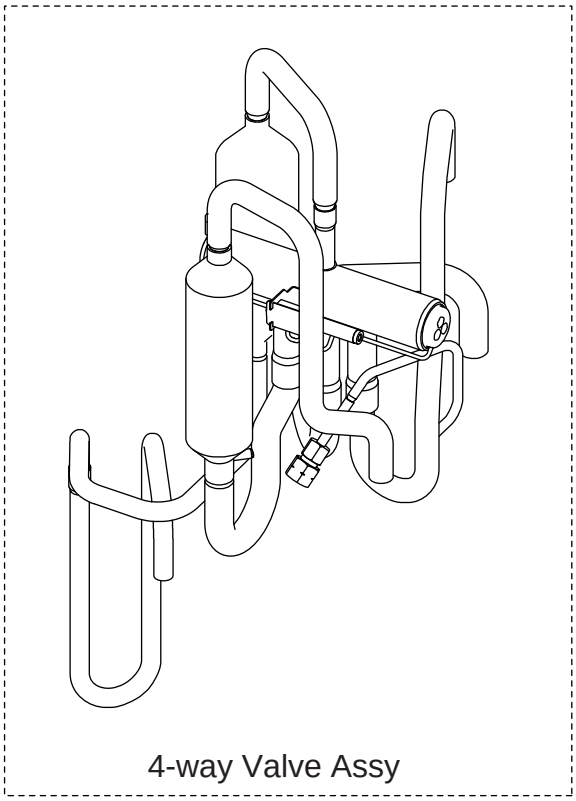

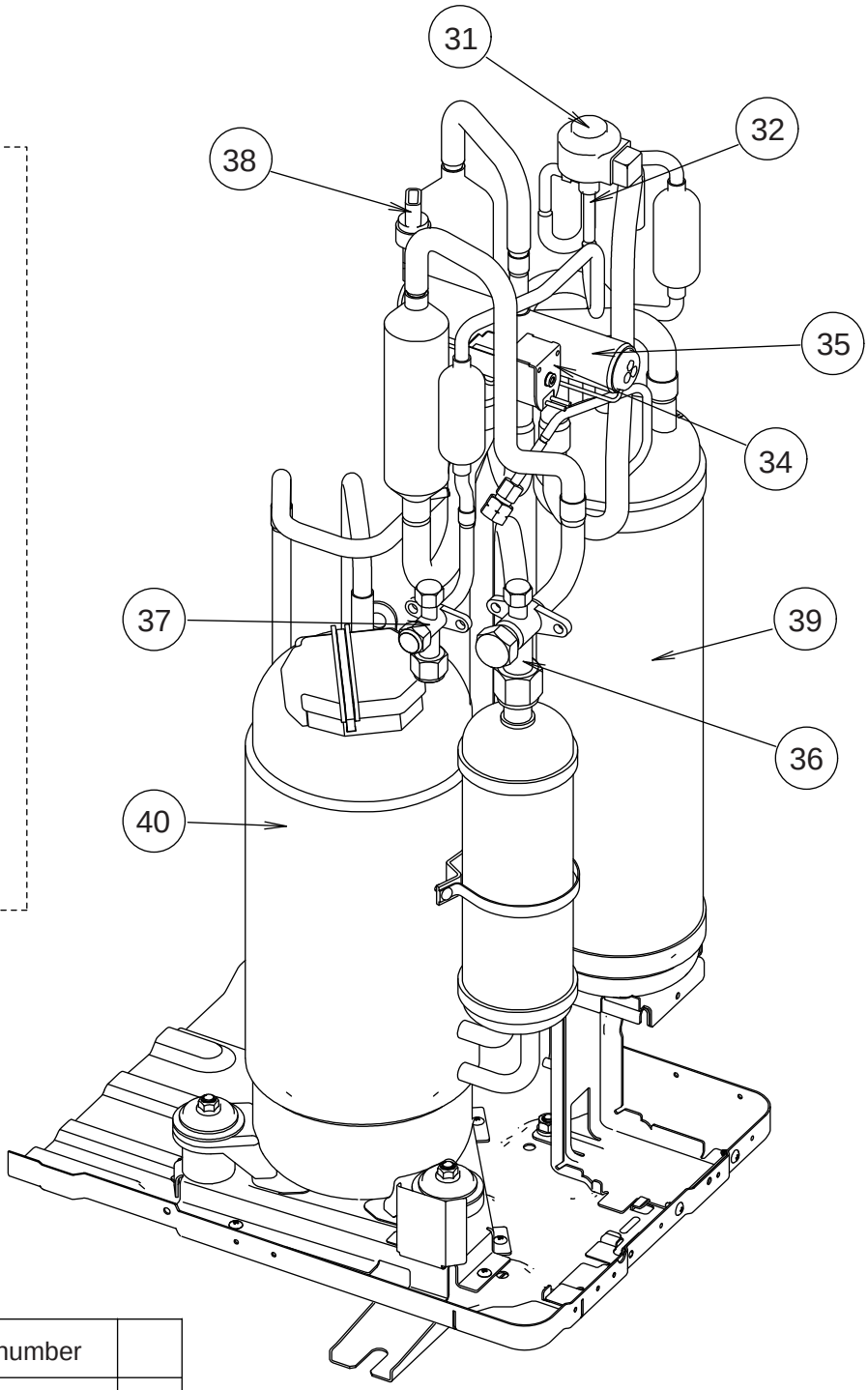

Ref.	Description	Parts number	
31	Expansion Valve Coil	9970098062	
32	Expansion Valve Assy	9370947182	
33	Strainer Assy	9372524039	
34	Solenoid	9970113055	
35	4-way Valve Assy	9374425273	
36	3-way Valve Assy	9379079006	
37	3-way Valve Assy	9379077002	
38	Sensor	9900505080	
39	Accumulator Assy	9375250096	
40	Compressor Sub Assy	9374423262	

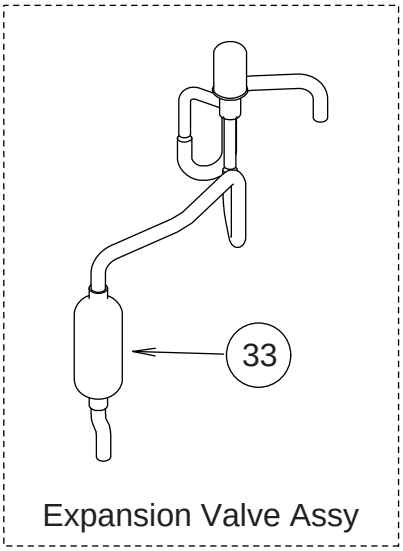

ACCESSORIES

INDOOR UNIT

Exterior	Q'ty	Use
Special nut A (Large flange)	4	313005446653 For suspending the indoor unit from ceiling 313005446759
Special nut A (small flange)	4	
Coupler heat insulation (Large)	1	9378173569 For indoor side pipe joint (Gas pipe)
Coupler heat insulation (Small)	1	9378173521 For indoor side pipe joint (Liquid pipe)
Cable tie (Large)	4	312300787605 For fixing the heat insulation
Cable tie (Medium)	4	313035356905 For fixing the remote control cable and connection cable
Cable tie (Small)	1	313361275805 For fixing the remote control cable
Remote control	1	9318593020 For Air conditioner operation
Screw (Flush heads)	2	0700181108 For installing indoor unit remote control

OPTIONAL PARTS

Exterior	Model	Use
Wired remote control	UTY-RNNYN	For Air conditioner operation
Simple remote control	UTY-RSNYN	For Air conditioner operation
Remote sensor	UTY-XSZX	New amenity space can be offered by installing the Remote sensor in the remote control
I.R receiver unit	UTY-LRHYM	For Air conditioner operation and demand responce display
External control set	UTD-ECS5A	Use to connect various periqheral devices and air conditioner PC board

OUTDOOR UNIT

Exterior	Q'ty	Use
Cable tie	3	For binding power supply cable and connection cable
Drain assy	1	9303029015 For outdoor unit drain piping work 313166024302
Drain cap	2	
One-touch bush	2	9378779013 For power supply cable and connection cable installation

1208G4101