MITSUBISHI HEAVY INDUSTRIES

AIR CONDITIONING

BEST BRAND AIR CONDITIONERS 2018 CHOICE RECOMMENDED 60 YEARS OF TRUST

BEST BRAND AIR CONDITIONERS 2019 CHOICE RECOMMENDED 60 YEARS OF TRUST

MOST SATISFIED CUSTOMERS 2019 CANSTAR BLUE AIR CONDITIONERS

HEATING AND COOLING SOLUTIONS

DUCTED SYSTEMS

AUSTRALIA'S BEST AIR CONDITIONER BRAND

We're proud to have been named by CHOICE® as Australia's best brand of air conditioner for the second year in a row whilst also being named by Canstar Blue as having the most satisfied customers of any air conditioner brand in Australia. If you're considering replacing or upgrading your air conditioner, why not choose the best?

MITSUBISHI HEAVY INDUSTRIES AIR CONDITIONERS AUSTRALIA

Mitsubishi Heavy Industries Air-Conditioners Australia (MHIAA) is one of Australia's leading suppliers of premium residential and commercial air conditioning systems. Delivering engineering excellence for over 130 years, the Mitsubishi Heavy Industries brand is instantly recognisable for quality and technological advancement. With innovation central to both the organisation and the development of air conditioning systems, Mitsubishi Heavy Industries carries a strong philosophy of engineering products that are designed to improve the lives of those who use them and, at the same time, create a sustainable future for our company and the world we live in.

BRAND AMBASSADOR TARA DENNIS

Interior designer and Television presenter Tara Dennis joins Mitsubishi Heavy Industries Air-Conditioners Australia as the brand's first ambassador to Australia and New Zealand. With extensive experience in home decoration and design, Tara represents the home renovator looking to improve the design of their homes. "As someone who has a passion for styling and renovating you want to push the boundaries and create a space that people love being in. Mitsubishi Heavy Industries Air conditioners Australia is the perfect extension of this and a brand that I am proud to be supporting"

Tara Dennis

COMMITTED TO QUALITY

Standing behind the quality of our products, is our commitment to our customers and our after sales service guarantees. Along with the rigorous quality assurance testing carried out on all Mitsubishi Heavy Industries products, comprehensive warranties provide you with peace of mind and carry our commitment to quality.

5 YEARS PARTS AND LABOUR WARRANTY

Mitsubishi Heavy Industries Air conditioners Australia focuses solely on manufacturing high performance air conditioners for the Australian market. All our systems are of the highest quality and are backed by a full 5 year parts and labour warranty.

EXCEEDING ENERGY PERFORMANCE STANDARDS

To comply with Australian standards and deliver the most efficient solutions possible to our customers, all Mitsubishi Heavy Industries Air conditioners Australia systems meet and exceed the Minimum Energy Performance Standards (MEPS).

MHIAA Ducted Systems

Our powerful yet quiet reverse cycle ducted systems let you enjoy the comfort of air conditioning in every part of your home or office with one packaged solution. With a discreet, low profile design that can be completely concealed in your ceiling and a variety of capacities and control options available, our ducted systems offer a flexible solution for any new or existing home.

Mitsubishi Heavy Industries ducted systems include an indoor unit (fan coil), outdoor unit (condenser) and controller while an installer will also incorporate insulated ducting, air outlets and a return air inlet with a filter. These components work in unison to offer a complete heating and cooling solution and ensure your comfort all year round.

All Mitsubishi Heavy Industries ducted systems are reverse cycle and have undergone strict and rigorous testing and quality control measures to ensure they are of the highest standards and will withstand the tough Australian climate.

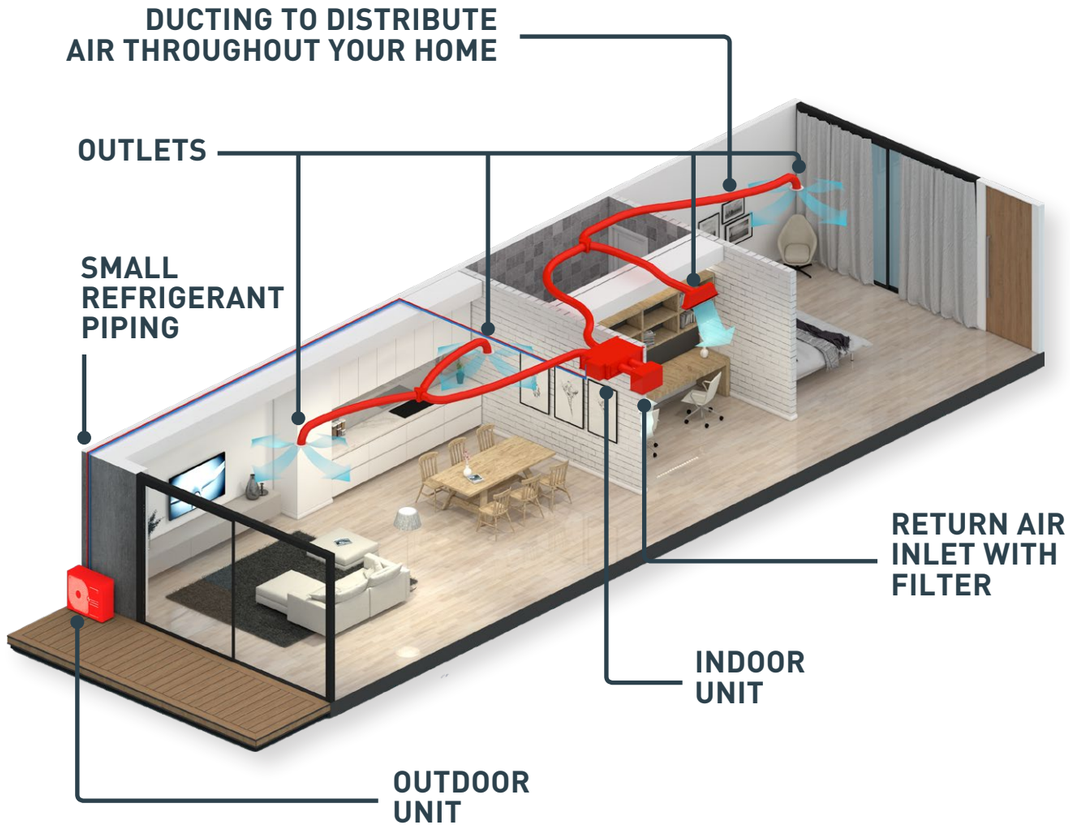

Our Technology

IMPROVED HEAT EXCHANGER

Our new and improved heat exchanger has been developed to improve refrigerant distribution and increase the systems effectiveness. The new design features a larger heat exchange area, boosting the unit's overall efficiency.

COATED PCB

To protect against humid weather a protective coating is applied to the circuit board in the outdoor unit, allowing it to withstand Australia's varying weather conditions and ensure the longevity of your system.

BLUE FIN TECHNOLOGY

Mitsubishi Heavy Industries outdoor units are coated with specially formulated layers that assist in preventing the hydrophilicity effect and assists in reducing the corrosion rate of the aluminium section from harsh Australian weather conditions.

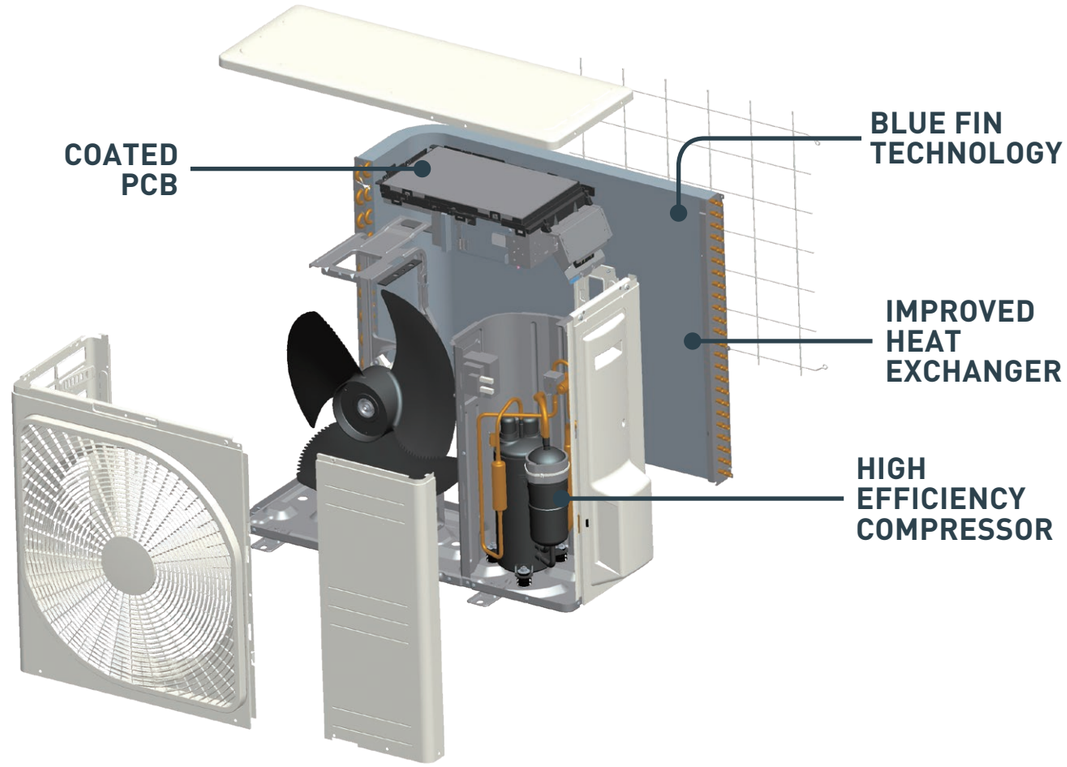

HIGH EFFICIENCY COMPRESSOR

One of the key features that provides Mitsubishi Heavy Industries air conditioners with their powerful performance is our highly efficient compressor. Combined with a Neodymium motor that uses powerful, rare earth magnets, Mitsubishi Heavy Industries air conditioners can deliver a higher motor efficiency while producing much less operational noise.

DC PAM INVERTER

The PAM control used in Mitsubishi Heavy Industries air conditioners helps minimise the loss of electricity and boost the efficiency by allowing the unit to reach the temperature quickly before slowing down the compressor. This allows the unit to save energy while maintaining a comfortable temperature in the room.

WIDE OPERATION RANGE

With our advanced technology and high quality components, Mitsubishi Heavy Industries air conditioners can operate in ambient outdoor temperatures as low as -20˚C in heating mode and as high as +46˚C in cooling mode.

This permits the installation in areas where the temperature conditions can be considered extreme.

FDUM Series

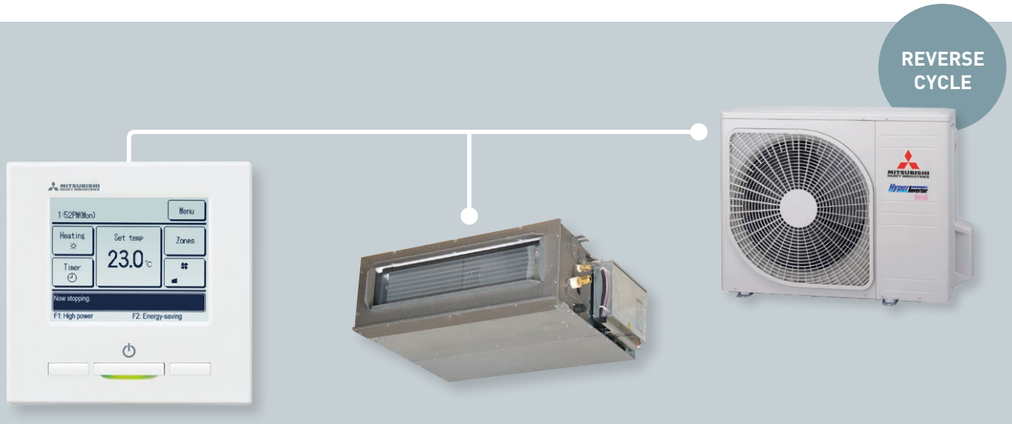

*See pg. 12 for full list of features and functions

MEDIUM STATIC PRESSURE

SINGLE PHASE MODELS (5.0KW - 5.6KW)

Energy Saving | Hi Power | Silent Operation | Automatic Operation | Weekly/Sleep/Peak-Cut Timer | Self-Diagnostics

5.0kW | 5.6kW

Our FDUM series of medium static ducted systems are quiet, compact and come in both 5.0kW and 5.6kW capacities. Incorporating a range of convenient and energy saving features and functions, the FDUM series is the perfect multi-room heating and cooling solution for smaller Aussie homes.

HYPER-INVERTER TECHNOLOGY

Our advanced hyper-inverter technology allows our ducted systems to reach the desired temperature quicker than ever before. Once the system has reached the set temperature it will ramp down and maintain this closely, switching on only when required - ensuring your comfort all year round and reducing energy consumption.

IMPROVED SERVICEABILITY

Designed to improve serviceability the fan unit (comprised of impeller and motor) in the FDUM series can be easily accessed from either the side or bottom of the unit and pulled out for trouble-free maintenance.

QUIET OPERATION

The FDUM series boasts a super quite operation level of 25 dB (A) on low fan speed. Combined with the unit's Silent Mode, the FDUM is perfect for bedrooms and ensures a good night's sleep for you and your family.

FLEXIBLE INSTALLATION

With a built-in drain pump, which includes a lift of 600mm, the FDUM allows greater flexibility during installation, making it the perfect solution for applications with limited ceiling space.

OTHER CONTROL OPTIONS

(SOLD SEPARATELY)

Wi-Fi | WIRELESS

FDU Series

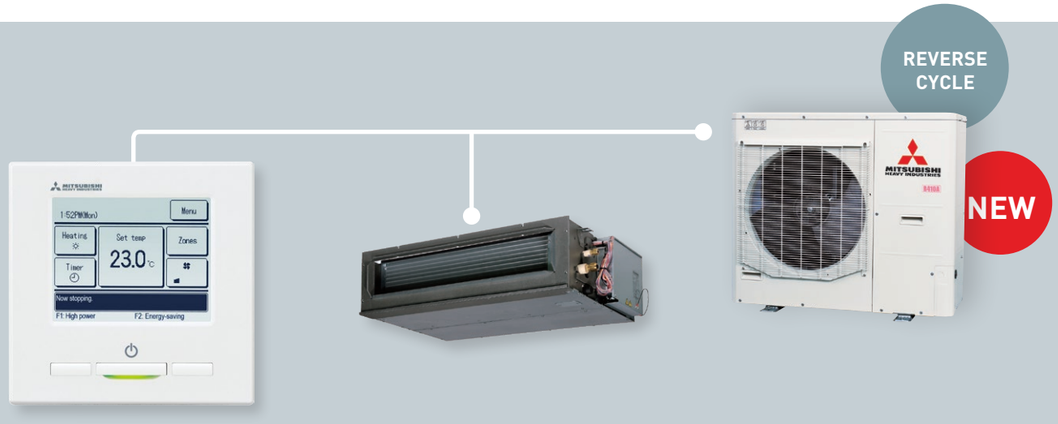

*See pg. 12 for full list of features and functions

MED/HIGH STATIC PRESSURE

SINGLE PHASE MODELS (7.1 KW - 14.0KW)
THREE PHASE MODELS (12.5KW - 14.0KW)

Energy Saving | Hi Power | Silent Operation | Automatic Operation | Weekly/Sleep/Peak-Cut Timer | Self-Diagnostics

7.1kW | 10.0kW | 12.5kW | 14.0kW

Our NEW FDU series of slimline ducted systems are a quiet and discreet solution for multiple rooms. Coming in a range of capacities ranging from 7.1kW up to 14kW and incorporating a range of convenient features and functions, the FDU series is the perfect heating and cooling solution for any sized Aussie home.

INCREASED ENERGY EFFICIENCY

With an improved heat exchanger in the outdoor unit, boosting refrigerant distribution throughout the system, coupled with our highly efficient DC fan motor within the indoor unit, the FDU series boasts industry leading energy efficiencies which means reduced running costs for your home.

SLIM LOW PROFILE DESIGN

With a slim, low-profile design measuring only 280mm in height, the FDU series offers the perfect solution for applications where ceiling space is limited.

QUIET OPERATION

Thanks to our highly efficient DC fan motor, the FDU series boasts some of the quietest operation levels on the market - with our 7.1kW unit achieving a market leading low of 25 dB (A) on low fan speed. Combined with the unit's Silent Mode, the FDU series ensures no interruptions to room acoustics and a good night's sleep for you and your family.

BALANCED AIRFLOW

Given every home is different, the FDU range allows the system's static pressure to be set manually during installation. This ensures the system delivers the perfect amount of airflow to each room - no matter what the setup, ensuring year round comfort for everyone in your home.

OTHER CONTROL OPTIONS

(SOLD SEPARATELY)

Wi-Fi | WIRELESS

FDUA Series

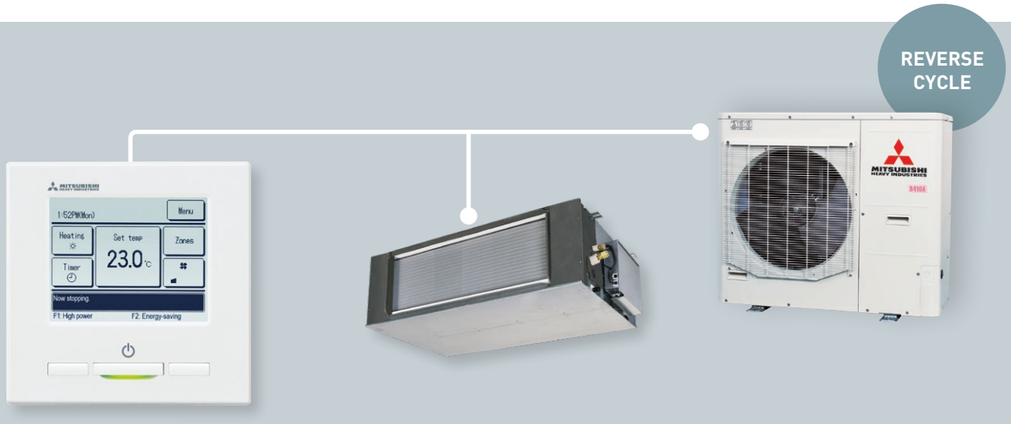

*See pg. 12 for full list of features and functions

HIGH STATIC PRESSURE

SINGLE PHASE MODELS (7.1 KW - 14.0KW)
THREE PHASE MODELS (12.5KW - 20.0KW)

Energy Saving | Hi Power | Silent Operation | Automatic Operation | Weekly/Sleep/ Peak-Cut Timer | Self-Diagnostics

7.1kW | 10.0kW | 12.5kW | 14.0kW |16.0kW | 20.0kW

Our FDUA series of ducted systems are a quiet and discreet solution for multiple rooms. Coming in a range of capacities ranging from 7.1kW up to 20kW and incorporating a range of convenient features and functions, the FDUA is the perfect heating and cooling solution for any sized Aussie home.

INCREASED ENERGY EFFICIENCY

With an improved heat exchanger in the outdoor unit, boosting refrigerant distribution throughout the system, coupled with our highly efficient DC fan motor within the indoor unit, the FDUA series boasts industry leading energy efficiencies which means reduced running costs for your home.

BALANCED AIRFLOW

Given every home is different, the FDUA range allows the system's static pressure to be set manually during installation. This ensures the system delivers the perfect amount of airflow to each room - no matter what the setup, ensuring year round comfort for everyone in your home.

QUIET OPERATION

Thanks to our highly efficient DC fan motor, the FDUA series boasts some of the quietest operation levels on the market - with our 7.1kW unit achieving a market leading low of 25 dB (A) on low fan speed. Combined with the unit's Silent Mode, the FDUA series ensures no interruptions to room acoustics and a good night's sleep for you and your family.

BUILT-IN DRAIN PUMP

Capitalising on Mitsubishi Heavy Industries extensive experience in drain pump technology, the FDUA series features a built-in condensation drain pump for easier installation.

OTHER CONTROL OPTIONS

(SOLD SEPARATELY)

Wi-Fi | WIRELESS

SRR Series

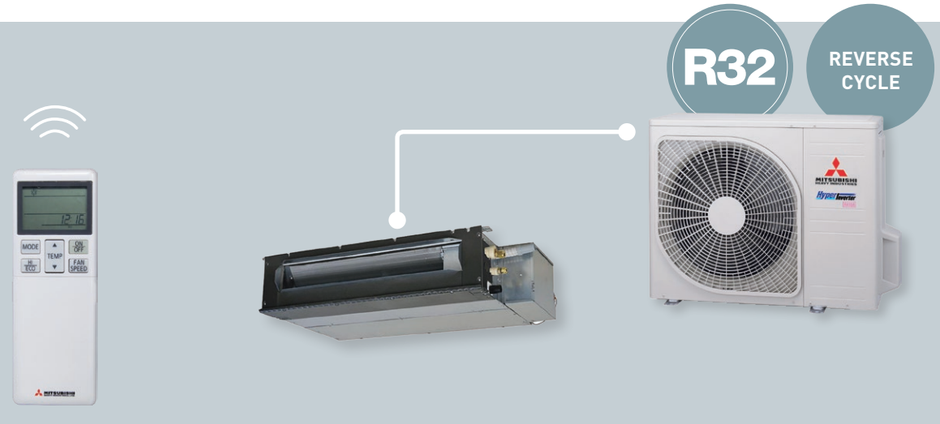

*See pg. 12 for full list of features and functions

BULKHEAD SYSTEM

SINGLE PHASE MODELS (2.5KW - 3.5KW)

Energy Saving | Hi Power | Silent Operation | Automatic Operation | Weekly/Sleep/ Peak-Cut Timer | Self-Diagnostics

2.5kW | 3.5 kW

Our low profile bulkhead systems are designed to sit within your ceiling space and distribute air via discreet grilles. These compact units require no ducting and are perfect for renovated spaces and applications such as apartments where space is at a premium as they can be factored in to the finished design to provide a quiet, efficient and integrated heating and cooling solution.

SUPER SLIM LOW PROFILE DESIGN

With a super slim, low-profile design measuring only 200mm in height, the SRR series offers the perfect solution for apartments or applications where ceiling space is limited and the indoor unit needs to be fitted in a concealed area.

SUPER QUIET OPERATION

The SRR series offers some of the quietest operation levels on the market achieving 24 dB(A) on low fan mode - perfect for bedrooms.

BUILT-IN DRAIN PUMP

Capitalising on Mitsubishi Heavy Industries extensive experience in drain pump technology, the SRR series features a built-in condensation drain pump for easier installation.

ECO MODE

Fuzzy logic algorithms allows the unit to accurately determine the most suitable operating mode, temperature setting and automatically adjusts the inverter frequency accordingly.

OTHER CONTROL OPTIONS

(SOLD SEPARATELY)

Wi-Fi | WIRED

Control Options

WIRED CONTROLLER

- Large, 3.8” backlit LCD touch screen with easy to navigate menu.
- Control the set temperature, operation mode and fan speed.
- Access timer and scheduling functions.
- Access additional features including Home Leave mode, Silent Mode, High Power mode plus many more.
- Multi-language display (6 languages)

*RC-EXZ3A controller shown.
**Requires SC-BIKN2-E kit (sold separately) for use with bulkhead systems.
***Function limitations may apply.

WIRELESS CONTROLLER

- Easy to use wireless remote.
- Large, LCD display.
- Control the set temperature, operation mode and fan speed.
- Access timer and scheduling functions.

*Wireless controller from RCN-KIT4-E2 shown. Standard with bulkhead systems.
**Requires RCN-KIT4-E2 wireless kit (sold separately) for use with ducted systems.
***Function limitations may apply.

WI-FI

- Control your system using your smart device (iPhone, iPad, Android) or internet browser via to easy to use IntesisHome app.
- Control the set temperature, operation mode and fan speed.
- Control your system via your Google or Amazon smart speaker device.
- Control your system using Voice Command.
- Set up ‘favourite’ scenes and activate them with a single tap.
- Set your system to respond to the weather, you arriving home, calendar events + more**.
- Receive instant notifications and email updates and create usage logs**.

*Requires MH-RC-WIFI-1B Wi-Fi adaptor (sold separately) for use with ducted systems.
*Requires MH-AC-WIFI-1 Wi-Fi adaptor (sold separately) for use with bulkhead systems.
**In conjunction with IFTTT and other apps (must be downloaded separately).
Some additional functions may not be available via IntesisHome app.
In some applications, a 12V DC external power supply may be required for MH-RC-WI-FI-1B.

works with the Google Assistant

amazon alexa

Siri

ANDROID APP ON Google play

Available on the App Store

IFTTT

IntesisHome®

Controlling your device with IntesisHome app requires aforementioned Wi-Fi adaptors and working internet or Wi-Fi connection. Google Account required for use with Google devices. Features and services may change without notice. Google is a trademark of Google LLC.

FlexiZone Zoning Solution

FLEXIZONE®

WIRED ZONE CONTROLLER

- Individual on/off control of up to 4 zones when used in conjunction with MHIAA’s zoning solution*.
- Large, 3.8” backlit LCD touch screen with easy to navigate menu.
- Control the operation mode and set temperature of your system.
- Access timer and scheduling functions.
- Access additional features including Home Leave mode, Silent Mode and High Power mode.
- Multi-language display (6 languages)

*RC-EXZ3A controller shown.
**MHIAA zoning solution includes relay board (MH-4ZRM). Transformer sold separately.

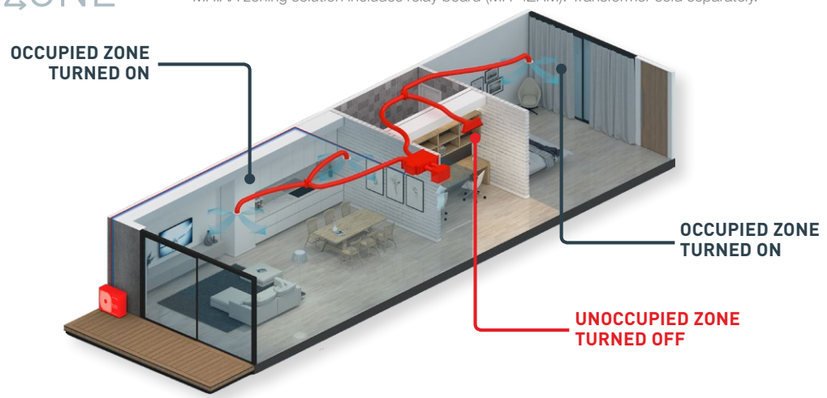

Airzone Zoning Solution

Easily integrated into any MHIAA ducted system the advanced Airzone zoning solution offers the ultimate level of comfort by providing complete temperature control over each individual zone of your home or office.

AIRZONE

AIRZONE ZONE CONTROLLER

- Individual temperature and on/off control of up to 6 zones when used in conjunction with Airzone zoning solution*.
- Control the set temperature, operation mode and fan speed.
- Turn unoccupied zones off to save energy.
- Control your system using your smart device (iPhone, iPad, Android) or internet browser via easy to use Airzone app.
- Access timer and scheduling functions.

*Blueface controller shown (AZVAFBLUEFACECB)
**Airzone zoning solution includes motorised dampers, Airzone control board and webserver (sold separately)

Features and Functions

		FUNCTION	DESCRIPTION	FDU	FDUA	FDUM	SRR
AIRFLOW		Automatic Fan Speed	On-board microcomputer continuously monitors the room's air temperature and adjusts the air flow automatically.	●	●	●	
		Air Filter	The air filter in the unit traps and removes airborne dust particles and other allergens to provide you with a clean air function.				●
		Filter Sign	Alerts you to when the filter needs to be cleaned.	●	●	●	●
		Outside Air Intake	Provides clean fresh air into the room through the external air intake, avoiding the constant recycling of internal air.	●	●	●	
		Self-Clean Operation	Dries the indoor unit components by running the fan on ultra-low mode, preventing the growth of mould. Designed to be run regularly after use.				●
ENERGY SAVING		Set Temperature Auto Return*	Allows you to program a preferred set temperature that the unit will return to each time it is operated.	●	●	●	
		Home Leave Operation*	Will maintain a moderate indoor temperature, avoiding extremely hot or cool temperatures. Perfect for when you're away on holidays.	●	●	●	
		Eco Operation	The unit operates at a slightly reduced capacity to reduce power consumption while maintaining a comfortable room temperature.	●	●	●	●
COMFORT& CONVENIENCE		Hi Power Operation*	Provides 15mins of boosted power allowing you to quickly heat or cool your home before returning to normal operation. Perfect for when you first turn on the unit.	●	●	●	●
		Dry Operation	Reduces humidity by removing moisture from the air without effecting the indoor temperature.	●	●	●	●
		Silent Operation	Allows you to program periods where the unit will operate with reduced noise levels, perfect for night time and an uninterrupted sleep.	●	●	●	●
		Automatic Operation	Automatically selects the required heating or cooling function based on the current room conditions.	●	●	●	●
		Function Switch*	From the six available functions on the unit, this function allows you to set two functions to operate automatically. (Note: this is not available when a centralised remote control is connected).	●	●	●	
TIMERS		On/Off Timer	Set your unit to turn on and off once, at specific times, within a 24 hour period. Unit will then turn on and off at the specified times every day.	●	●	●	●
		Weekly Timer	Set your unit to turn on and off automatically on a weekly basis to suit your usual room usage on each day.	●	●	●	●
		Sleep Timer	This function allows you to set a per-determined amount of time between 30 and 240 mins that your unit will operate for before switching off.	●	●	●	●
		Night Setback	Designed for the colder seasons, this function ensures the room temperature is kept at around 10°C, even while unoccupied.				●
		Peak-Cut Timer*	This function lets you to preset the capacity limit during certain periods of the day, minimising energy consumption during peak billing times, thus reducing operation costs.	●	●	●	
MAINTENANCE & PREVENTION		Child Lock	Locks the remote control to prevent little ones from changing functions and other settings. Useful for families with curious young children.				●
		Self-Diagnostics	Microcomputer automatically runs a diagnostic of the system in the event of a malfunction. This enables your authorised dealer to isolate and repair any issues.	●	●	●	●
		Improved Serviceability	The fan unit (comprised of impeller and motor) is easily accessible from either the side or bottom of the unit and can be slid out for easy maintenance.	●	●	●	
		Built-in Drain Pump	The built-in drain pump, which includes a lift of 600mm, allows greater flexibility with installation, offering a great solution for applications with limited space.	●	●	●	●
		Auto Restart Function	Automatically restarts the unit in the same operating mode if it suffers a loss of power.	●	●	●	●

*Functions can only be enabled using RC-EXZ3A wired controller.

FDCA125-140VSX

FDCA100VN, FDC100VNP

FDCA71VNX

SRC50-60ZMXA-S

FDU71-140VH

FDUM50-60VH

PRODUCT SPECIFICATIONS
FDUM & FDU SERIES

CAPACITY				5.0 KW	5.6 KW	7.1 KW	10.0KW	10.0 KW	12.5 KW	14.0 KW	12.5 KW	14.0 KW
Set				FDUM50ZMXAVH	FDUM60	FDU71AVNXAVH	FDU100VNP1VH	FDU100AVNVF2	FDU125AVNXVH	FDU140AVNXVH	FDU125VSXVH	FDU140AVSXVH
Indoor				FDUM50VH	FDUM60VH	FDU71VH	FDU100VH	FDU100VH	FDU125VH	FDU140VH	FDU125VH	FDU140VH
Outdoor				SRC50ZMXA-S	SRC60ZMXA-S	FDCA71VNXA	FDC100VNP	FDCA100VN	FDCA125VNX	FDCA140VNX	FDC125VSX	FDCA140VSX
Power Source (Outdoor Unit)				1 Phase 240V 50Hz			1 Phase 240V 50Hz				3 Phase 380-415V 50Hz	
*Operation Data	Nominal Capacity Range	Cooling T1	kW	5.0 (2.2-5.6)	5.6 (2.8-6.3)	7.1 (3.2-8.0)	10.0 (2.8-11.2)	10.0 (4.0-11.2)	12.5 (5.0-14.0)	14.0 (5.0-16.0)	12.5 (5.0-14.0)	14.0 (5.0-16.0)
		Heating H1		5.4 (0.6-6.3)	6.7 (0.6-7.1)	8.0 (3.6-9.0)	11.2 (2.5-12.5)	11.2 (4.0-12.5)	14.0 (4.0-17.0)	16.0 (4.0-18.0)	14.0 (4.0-18.0)	16.0 (4.0-16.5)
		Heating H2		4.3	4.9	7.0	8.27	11.4	13.7	14.3	16.2	NA
	Power Consumption	Cooling T1	kW	1.56	1.75	2.20	3.00	2.92	3.60	4.40	3.60	4.40
		Heating H1		1.70	2.00	2.20	2.93	3.20	3.90	4.54	3.90	4.54
	Max Power Consumption		kW	2.90	2.90	3.54	4.60	4.23	6.30	6.19	6.80	7.74
	Running Current	Cooling T1	A	7.00	7.80	9.80	13.20	13.10	16.00	19.50	6.10	6.70
		Heating H1		7.60	9.00	9.80	12.90	14.30	17.40	20.30	6.60	7.00
	Inrush Current, Maximum Current		A	5, 15	5, 15	5, 17	5, 22	5, 25	5, 29	5, 30	5, 18	5, 19
	EER	Cooling T1		3.21	3.20	3.23	3.33	3.42	3.47	3.18	3.47	3.18
	COP	Heating H1		3.18	3.35	3.64	3.82	3.50	3.59	3.52	3.59	3.52
	Sound Power Level (JIS C9612)	Outdoor		63	64	66	70	70	70	72	70	70
	Sound Pressure Level (JIS C9612)	Indoor	dB(A)	P-Hi:37 Hi:32 Me:29 Lo:26	P-Hi:36 Hi:31 Me:28 Lo:25	P-Hi:38 Hi:33 Me:29 Lo:25	P-Hi:44 Hi:38 Me:36 Lo:30	P-Hi:44 Hi:38 Me:36 Lo:30	P-Hi:45 Hi:40 Me:34 Lo:29	P-Hi:47 Hi:40 Me:35 Lo:30	P-Hi: 47 Hi: 40 Me: 35 Lo: 30	P-Hi:47 Hi:40 Me:35 Lo:30
		Outdoor		50	54	51	57	49	50	49	48	49
External Dimensions (HXWXD)		Indoor	mm	280x750x635	280x950x635	280x950x635	280x1370x740	280x1370x740	280x1370x740	280x1370x740	280x1370x740	280x1370x740
		Outdoor		640x800(+71)x290	640x800(+71)x290	750x880(+88)x340	845x970x370	845x970x370	1300x970x370	1300x970x370	1300x970x370	1300x970x370
Net Weight		Indoor	Kg	29	34	34	54	54	54	54	54	54
		Outdoor		45	45	61	70	82	106	106	106	106
Supply Air Connection			mm	170x680	170x880	170x880	170x1200	170x1200	170x1200	170x1200	170x1200	170x1200
Return Air Connection			mm	200x660	200x860	200x860	235x1280	235x1280	235x1280	235x1280	235x1280	235x1280
External Static Pressure (Max)			Pa	100	100	200	200	200	200	200	200	200
Airflow		Indoor (Cooling)	L/s	P-Hi: 217 Hi: 167 Me: 150 Lo: 133	P-Hi:333 Hi:250 Me:217 Lo:167	P-Hi: 400 Hi: 316 Me: 260 Lo: 166	P-Hi:600 Hi:467 Me:417 Lo:317	P-Hi: 600 Hi: 467 Me: 417 Lo: 317	P-Hi:650 Hi:533 Me:433 Lo:333	P-Hi:800 Hi:583 Me:433 Lo:333	P-Hi:650 Hi:533 Me:433 Lo:333	P-Hi:800 Hi:583 Me:467 Lo:367
		Indoor (Heating)										
Refrigerant (Type, Amount, Pre-charge Length)		Quantity	Kg	(R410A) 1.5	(R410A) 1.5	(R410A) 2.95	(R410A) 2.55	(R410A) 3.8	(R410A) 4.5	(R410A) 4.5	(R410A) 4.5	(R410A) 4.5
		Pre Charged To Pipe Length	m	15	15	30	15	30	30	30	30	30
	Refrigerant Piping	Liquid Line	mm	Ø6.35	Ø6.35	Ø9.52	Ø9.52	Ø9.52	Ø9.52	Ø9.52	Ø9.52	Ø9.52
		Gas Line		Ø12.7	Ø12.7	Ø15.88	Ø15.88	Ø15.88	Ø15.88	Ø15.88	Ø15.88	Ø15.88
Installation Data	Connection Method			Flare Connection								
	Maximum Pipe Length (One Way)		mm	30	30	50	50	50	100	100	100	100
	Max vertical height diff. between O.U. and I.U.			20 (O.U. above I.U.) / 20 (O.U. below I.U.)			30 (O.U. above I.U.) / 15 (O.U. below I.U.)					
Controller				RC-E5, RC-EXZ3A, RCH-E3 or RCN-KIT4-E2								
Motion Sensor (Optional)				LB-KIT								
Demand response (AS4755)				Yes	Yes	Yes	No	Yes	Yes	Yes	No	No

* Operation data has been gathered in accordance with AS/NZS 3823 standards. For testing conditions please refer to Page 15

PRODUCT SPECIFICATIONS

FDUA SERIES

FDUA71VF/G

FDUA100-160VF/G

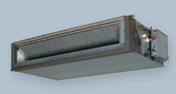
FDUA200VG

FDCA71VNXA

FDCA100VN, FDC100VNP

FDCA125-140VNX, FDCA125-140VSX

FDCA160-200VSA

CAPACITY				7.1 KW	10.0 KW	10.0KW	12.5KW	14.0KW	12.5KW	14.0KW	16.0KW	20.0KW
Set				FDUA71AVNXVF	FDUA100VNP1VF2	FDUA100AVNVF2	FDUA125AVNXVF	FDUA140AVNXVF	FDUA125VSXVF	FDUA140AVSXVF	FDUA160AVSAVF	FDUA200AVSAVG
Indoor				FDUA71VF	FDUA100VF2	FDUA100VF2	FDUA125VF	FDUA140VF	FDUA125VF	FDUA140VF	FDUA160VF	FDUA200VG
Outdoor				FDCA71VNXA	FDC100VNP	FDCA100VN	FDCA125VNX	FDCA140VNX	FDC125VSX	FDCA140VSX	FDCA160VSA	FDCA200VSA
Power Source (Outdoor Unit)				1 Phase 240V 50Hz					3 Phase 380-415V 50Hz			
*Operation Data	Nominal Capacity Range	Cooling T1	kW	7.1 (3.2-8.0)	10.0 (2.8-11.2)	10.0 (4.0-11.2)	12.5 (5.0-14.0)	14.0 (5.0-16.0)	12.5 (5.0 - 14.0)	14.0 (5.0-16.0)	16.0 (6.9-20.0)	20.0 (6.9-28.0)
		Heating H1		8.0 (3.6-9.0)	11.2 (2.5-12.5)	11.2 (4.0-12.5)	14.0 (4.0-17.0)	16.0 (4.0-18.0)	14.0 (4.0- 18.0)	16.0 (4.0-18.0)	18.0 (5.5-22.4)	22.4(5.5-31.5)
		Heating H2		7.0	8.04	10.0	14.0	15.0	16.0	14.0	15.0	22.0
	Power Consumption	Cooling T1	kW	2.20	2.99	3.05	3.83	4.44	3.83	4.44	4.83	6.03
		Heating H1		2.20	2.88	2.87	3.68	4.41	3.68	4.44	4.66	5.50
	Max Power Consumption		kW	3.54	4.60	4.02	6.13	5.77	7.66	7.26	12.70	13.70
	Running Current	Cooling T1	A	9.80	13.20	13.60	17.00	19.70	6.40	6.80	7.80	9.50
		Heating H1		9.80	12.90	12.70	16.30	19.60	6.20	6.70	7.60	8.70
	Inrush Current, Maximum Current		A	5, 17	5, 22	5, 25	5, 29	5, 30	5, 18	5, 19	5, 24	5, 27
	EER	Cooling T1		3.23	3.34	3.28	3.26	3.15	3.26	3.15	3.31	3.32
	COP	Heating H1		3.64	3.89	3.90	3.80	3.63	3.8	3.6	3.86	4.07
	Sound Power Level (JS C9612)	Outdoor	dB(A)	66	70	70	70	72	70	70	73	73
	Sound Pressure Level (JS C9612)	Indoor		P-Hi:38 Hi:33 Me:29 Lo:25	P-Hi:43 Hi:42 Me:40 Lo:37	P-Hi:43 Hi:42 Me:40 Lo:37	P-Hi:45 Hi:43 Me:41 Lo:37	P-Hi:47 Hi:46 Me:43 Lo:40	P-Hi : 47 Hi : 46 Me : 43 Lo : 40	P-Hi:47 Hi:46 Me:43 Lo:40	P-Hi:49 Hi:48 Me:45 Lo:42	P-Hi:52 Hi:50 Me:47 Lo:45
		Outdoor		51	57	49	48	49	48	49	59	59
External Dimensions (HXWXD)		Indoor	mm	280x950x635	398x1150x650	398x1150x650	398x1150x650	398x1150x650	398x1150x650	398x1150x650	398x1150x650	379x1600x893
		Outdoor		750x880(+88)x340	845x970x370	845x970x370	1300x970x370	1300x970x370	1300x970x370	1300x970x370	1505x970x370	1505x970x370
Net Weight		Indoor	Kg	34	52	52	52	52	52	52	52	89
		Outdoor		61	70	81	106	106	106	106	143	143
Supply Air Connection			mm	170x880	348x898	348x898	348x898	348x898	348x898	348x898	348x898	250x1450
Return Air Connection			mm	200x860	348x898	348x898	348x898	348x898	348x898	348x898	348x898	250x1450
External Static Pressure (Max)			Pa	200	200	200	200	200	200	200	200	200
Airflow		Indoor (Cooling)	L/s	P-Hi: 400 Hi: 316 Me: 250 Lo: 166	P-Hi:650 Hi:600 Me:550 Lo:483	P-Hi:650 Hi:600 Me:550 Lo:483	P-Hi:717 Hi:650 Me:600 Lo:500	P-Hi:850 Hi:800 Me:700 Lo:600	P-Hi:717 Hi:650 Me:600 Lo:500	P-Hi:850 Hi:800 Me:700 Lo:600	P-Hi:850 Hi:800 Me:700 Lo:600	P-Hi:1333 Hi:1200 Me:1067 Lo:933
		Indoor (Heating)										
Refrigerant (Type, Amount, Pre-charge Length)		Quantity	Kg	(R410A) 2.95	(R410A) 2.55	(R410A) 3.8	(R410A) 4.5	(R410A) 4.5	(R410A) 4.5	(R410A) 4.5	(R410A) 7.2	(R410A) 7.2
		Pre Charged To Pipe Length	m	30	15	30	30	30	30	30	30	30
Installation Data	Refrigerant Piping	Liquid Line	mm	Ø9.52	Ø9.52	Ø9.52	Ø9.52	Ø9.52	Ø9.52	Ø9.52	Ø12.7	Ø12.7
		Gas Line		Ø15.88	Ø15.88	Ø15.88	Ø15.88	Ø15.88	Ø15.88	Ø15.88	Ø22.22 , Ø25.4 or Ø28.58	Ø22.22 , Ø25.4 or Ø28.58
	Connection Method			Flare connection							Liquid: Flare / Gas: Brazing	
	Maximum Pipe Length (One Way)		mm	50	30	50	100	100	100	100	**70	**70
	Max vertical height diff. between O.U. and I.U.			30 (O.U. above I.U.) / 15 (O.U. below I.U.)	20 (O.U. above I.U.) / 15 (O.U. below I.U.)	30 (O.U. above I.U.) / 15 (O.U. below I.U.)						
Controller				RC-E5, RC-EXZ3A, RCH-E3 or RCN-KIT4-E2								
Safety Pan (Optional)				UA-SP1-E	UA-SP1-E	UA-SP2-E	UA-SP2-E	UA-SP2-E	UA-SP2-E	UA-SP2-E	UA-SP2-E	N/A
Motion Sensor (Optional)				LB-KIT								
Demand response (AS4755)				Yes	No	Yes	Yes	Yes	No	Yes	Yes	Yes

* Operation data has been gathered in accordance with AS/NZS 3823 standards. For testing conditions please refer to Page 15.
** Maximum 70m (Gas piping:Ø25.4 or Ø28.58), Maximum 35m (Gas piping:Ø22.22)

PRODUCT SPECIFICATIONS

SRR SERIES

SRR25-35ZS-W

SRC25-35ZSA-W

CAPACITY					2.5kW	3.5kW
Indoor					SRR25ZS-W	SRR35ZS-W
Outdoor					SRC25ZSA-W	SRC35ZSA-W
Power Source (Outdoor Unit)					1 Phase 240V 50Hz	
*Operation Data	Nominal Capacity (Range)		Cooling T1	kW	2.5 (0.9~3.4)	3.5 (0.9~4.1)
			Heating H1		3.4 (0.9~4.8)	4.2 (1.0~5.2)
			Heating H2		3.55	4.1
	Power Consumption		Cooling T1	kW	0.56 (0.20~0.90)	0.93 (0.19~1.26)
			Heating H1		0.75 (0.20~1.42)	1.01 (0.20~1.45)
	Maximum Power Consumption			kW	1.65	1.65
	Running Current		Cooling T1	A	2.7	4.2
			Heating H1		3.5	4.5
	Inrush Current, Maximum Current			A	3.5, 9.0	4.5, 9.0
	EER		Cooling T1		4.46	4.16
	COP		Heating H1		4.53	3.04
	Sound Power Level (JIS C9612)		Outdoor	dB (A)	60	62
	Sound Pressure Level (JIS C9612)		Indoor	dB(A)	37-33-30-24	38-34-31-25
			Outdoor		47	50
	External dimensions (HXWXD)		Indoor	mm	200x750(+120)x500	200x750(+120)x500
			Outdoor		540x780(+62)x290	540x780(+62)x290
Energy Label (GEMS 2019)		Hot	Cooling	Stars	★★★½ (3.5)	★★★½ (3.5)
			Heating		★★★½ (3.5)	★★★ (3)
		Average	Cooling		★★★ (3)	★★★ (3)
			Heating		★★★ (3)	★★½ (2.5)
		Cold	Cooling		★★★ (3)	★★★ (3)
			Heating		★★½ (2.5)	★★½ (2.5)
Net weight			Indoor	kg	20.5	20.5
			Outdoor		34.5	34.5
Airflow			Cooling (Indoor)	L/s	P-Hi:158 Hi:133 Me:108 Lo:75	P-Hi:167 Hi:142 Me:117 Lo:83
			Heating (Indoor)		P-Hi:167 Hi:150 Me:133 Lo:100	P-Hi:175 Hi:158 Me:142 Lo:108
Installation Data	Refrigerant (Type, Amount, Pre-charge Length)		Quantity	kg	(R32) 0.78	(R32) 0.78
			Pre-Charged to Pipe	m	15	15
	Refrigerant Piping		Liquid line	mm	Ø6.35	Ø6.35
			Gas line		Ø9.52	Ø9.52
	Connection Method				Flare connection	
	Maximum Pipe Length (One Way)			m	20	
	Max Vertical Height Diff. Between O.U. and I.U.			m	10 (O.U. above I.U.) / 10 (O.U. below I.U.)	
Standard accessories					Polypropylene net x1	
Optional parts					Interface kit (SC-BIKN2-E) / Wi-Fi Kit	
Demand Response (AS4755)					Yes	

*(1) The data is measured at the following conditions:

Item / Operation	Indoor Air Temperature DB	Indoor Air Temperature WB	Outdoor Air Temperature DB	Outdoor Air Temperature WB	Standards
Cooling	27°C	19°C	35°C	24°C	AS/NZ 3823.2
Heating	20°C	-	7°C	6°C	

(2) The air conditioner is manufactured and tested in conformity with the AS/NZS.
(3) Sound level indicates the value in an anechoic chamber. During operation these values are somewhat higher due to ambient conditions.
(4) Select the breaker size according to applicable national standard.
(5) The operation data indicate when the air-conditioner is operated at 240V 50Hz for 1 phase and 400V 50Hz for 3 phase

FDUM Series

Model FDUM50VH

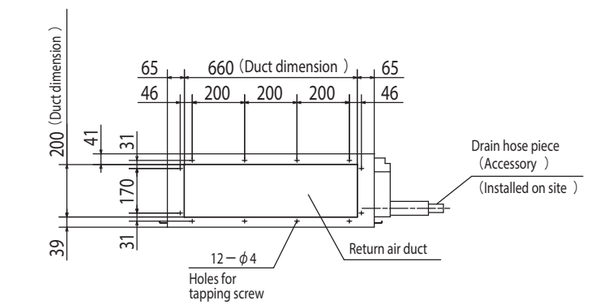

Symbol	Content	
A	Gas piping	φ12.7 (1/2") (Flare)
B	Liquid piping	φ6.35 (1/4") (Flare)
C1	Drain piping	VP25 (O.D.32)
C2	Drain piping (Gravity drainage)	VP20
D	Hole for wiring	
E	Suspension bolts	(M10)
F	Outside air opening for ducting	(φ150) (Knock out)
G	Air outlet opening for ducting	(φ125) (Knock out)
H	Inspection opening	(450×450)

Note (1) The model name label is attached on the lid of the control box.

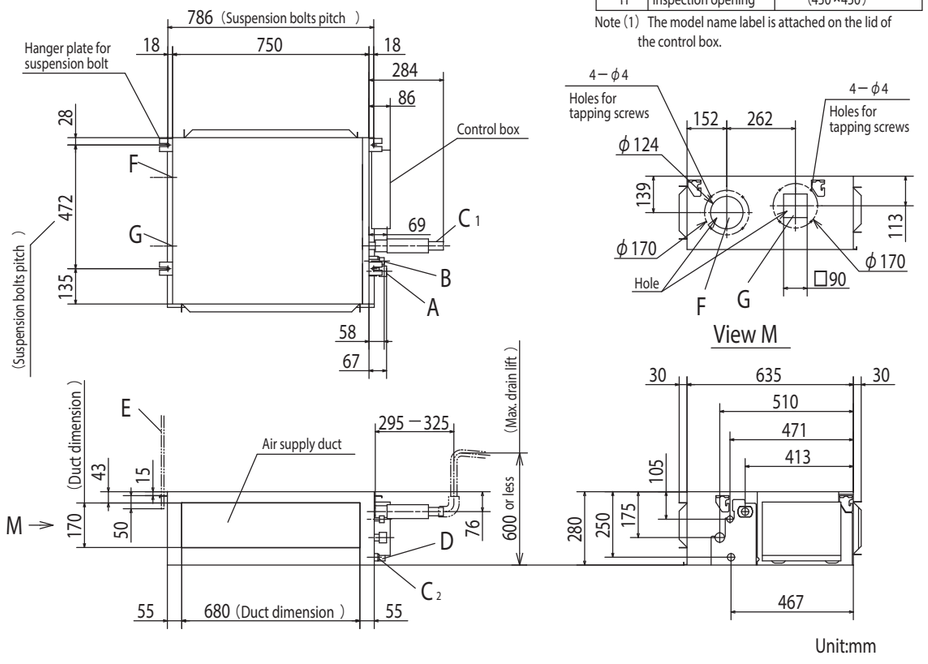

Space for installation and service

Select either of two cases to keep space for installation and services.

(Case 1) From side of unit

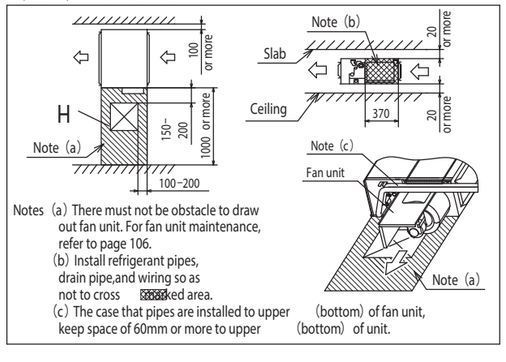

Notes (a) There must not be obstacle to draw out fan unit. For fan unit maintenance, refer to page 106.
(b) Install refrigerant pipes, drain pipe,and wiring so as not to cross ▨ ked area.
(c) The case that pipes are installed to upper (bottom) of fan unit, keep space of 60mm or more to upper (bottom) of unit.

(Case 2) From bottom of unit

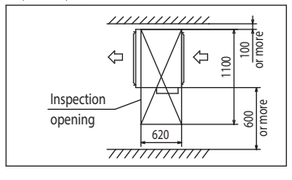

FDUM Series

Model FDUM60VH

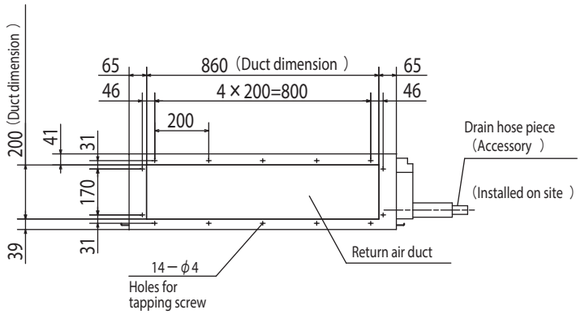

Symbol	Content		
	Model	60	71
A	Gas piping	φ12.7 (1/2") (Flare)	φ15.88 (5/8") (Flare)
B	Liquid piping	φ6.35 (1/4") (Flare)	φ9.52 (3/8") (Flare)
C1	Drain piping	VP25 (O.D.32)	
C2	Drain piping (Gravity drainage)	VP20	
D	Hole for wiring		
E	Suspension bolts	(M10)	
F	Outside air opening for ducting	(φ150) (Knock out)	
G	Air outlet opening for ducting	(φ125) (Knock out)	
H	Inspection opening	(450×450)	

Note (1) The model name label is attached on the lid of the control box.

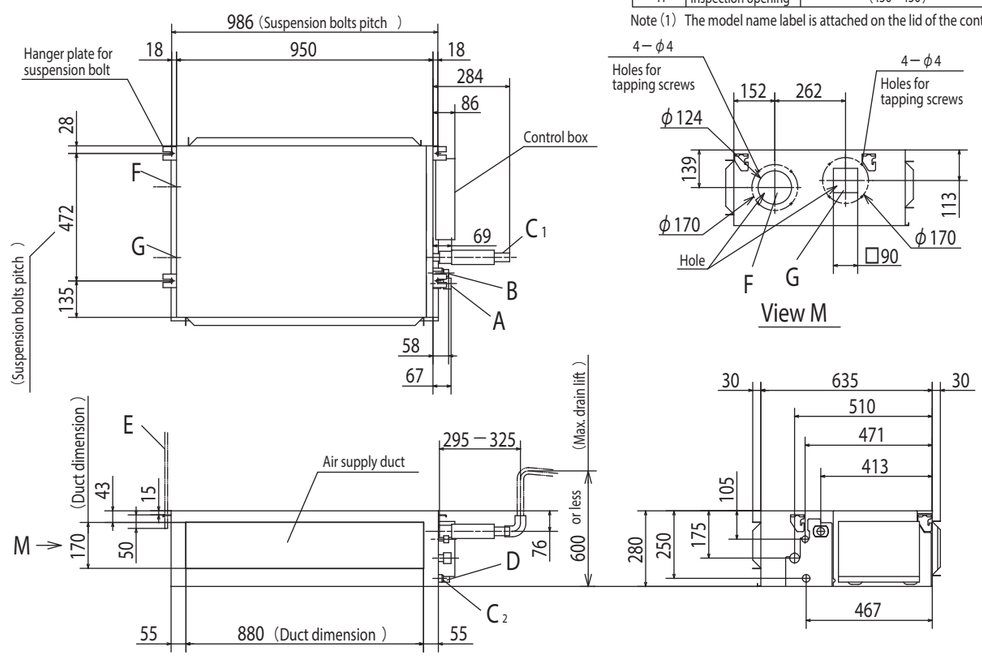

Space for installation and service

Select either of two cases to keep space for installation and services.

(Case 1) From side of unit

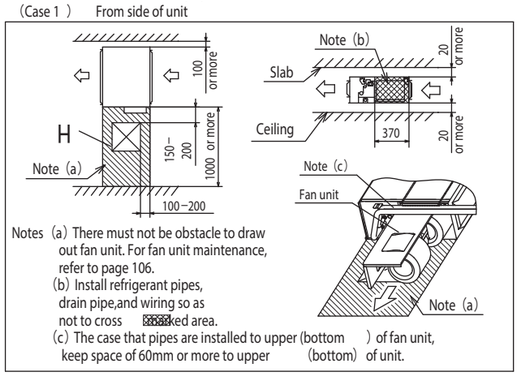

Notes (a) There must not be obstacle to draw out fan unit. For fan unit maintenance, refer to page 106.
(b) Install refrigerant pipes, drain pipe,and wiring so as not to cross ▨ ked area.
(c) The case that pipes are installed to upper (bottom) of fan unit, keep space of 60mm or more to upper (bottom) of unit.

(Case 2) From bottom of unit

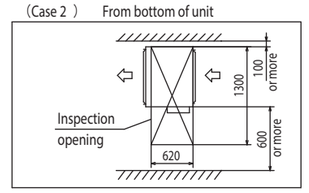

FDU Series

Model FDU71VH

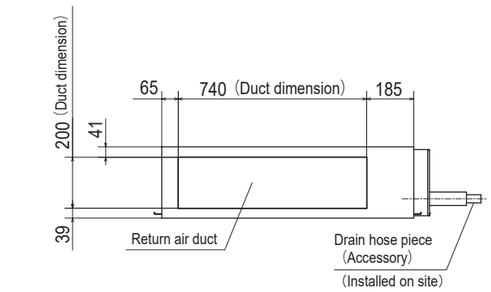

Symbol	Content	
A	Gas piping	φ 15.88 (5/8") (Flare)
B	Liquid piping	φ 9.52 (3/8") (Flare)
C1	Drain piping	VP25 (O.D.32)
C2	Drain piping (Gravity drainage)	VP20
D	Hole for wiring	
E	Suspension bolts	(M10)
F	Outside air opening for ducting	(Knock out)
G	Air outlet opening for ducting	(Knock out)
H	Inspection opening	(450×450)

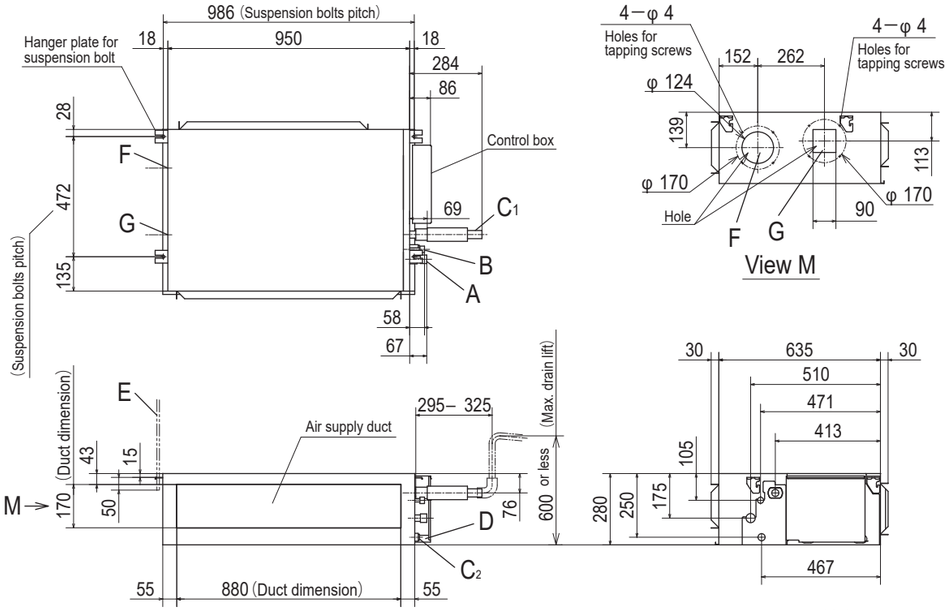

Unit:mm

Space for installation and service

Select either of two cases to keep space for installation and services.

(Case 1) From side of unit

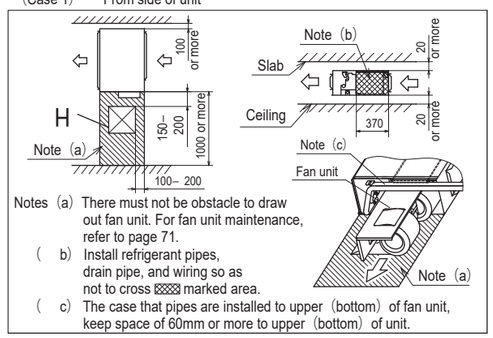

Notes (a) There must not be obstacle to draw out fan unit. For fan unit maintenance, refer to page 71.

(b) Install refrigerant pipes, drain pipe, and wiring so as not to cross ▨ marked area.

(c) The case that pipes are installed to upper (bottom) of fan unit, keep space of 60mm or more to upper (bottom) of unit.

(Case 2) From bottom of unit

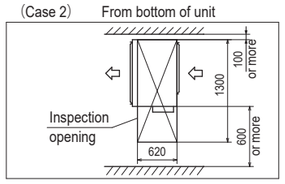

Note (1) The model name label is attached on the lid of the control box.

FDU Series

Models FDU100VH, 125VH, 140VH

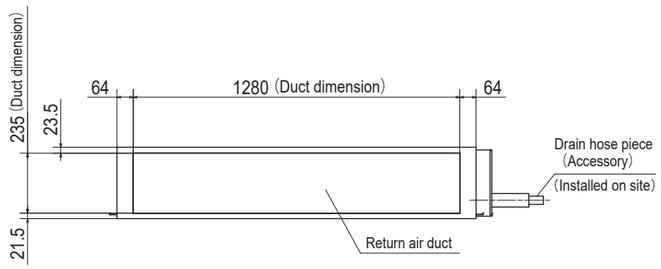

Symbol	Content	
A	Gas piping	ϕ15.88 (5/8") (Flare)
B	Liquid piping	ϕ9.52 (3/8") (Flare)
C1	Drain piping	VP25 (O.D.32)
C2	Drain piping (Gravity drainage)	VP20
D	Hole for wiring	
E	Suspension bolts	(M10)
F	Outside air opening for ducting	(Knock out)
G	Air outlet opening for ducting	(Knock out)
H	Inspection opening	(450×450)

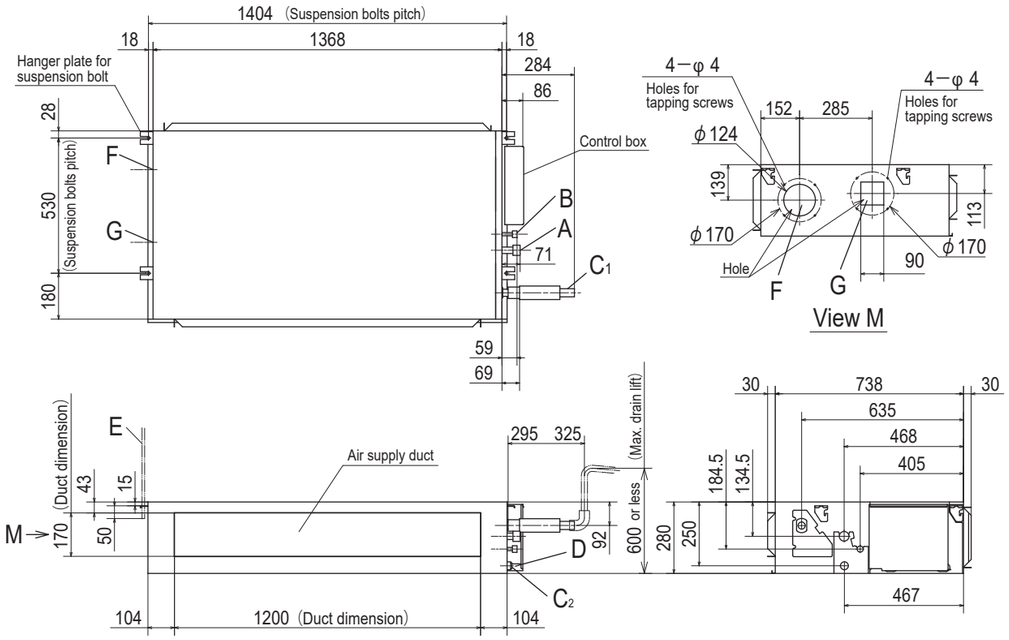

Unit:mm

Space for installation and service

Select either of two cases to keep space for installation and services.

(Case 1) From side of unit

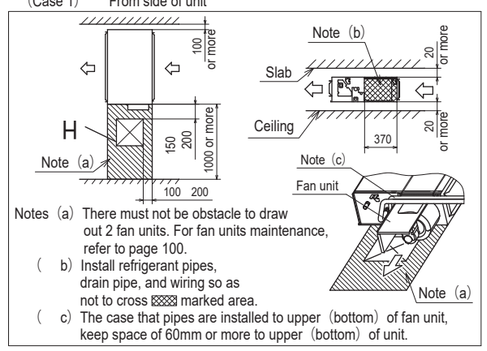

Notes (a) There must not be obstacle to draw out 2 fan units. For fan units maintenance, refer to page 100.

(b) Install refrigerant pipes, drain pipe, and wiring so as not to cross ▨ marked area.

(c) The case that pipes are installed to upper (bottom) of fan unit, keep space of 60mm or more to upper (bottom) of unit.

(Case 2) From bottom of unit

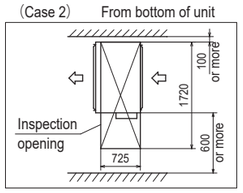

Note (1) The model name label is attached on the lid of the control box.

FDUA Series

Models FDUA100VH, 125VH, 140H

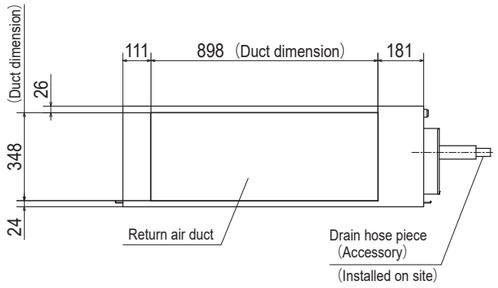

Symbol	Content	
A	Gas piping	ϕ15.88 (5/8") (Flare)
B	Liquid piping	ϕ9.52 (3/8") (Flare)
C1	Drain piping	VP25 (I.D.25,O.D.32)
C2	Drain piping (Gravity drainage)	VP25 (I.D.25,O.D.32)
D	Hole for wiring	
E	Suspension bolts	(M10)
F	Inspection hole	(450×450)

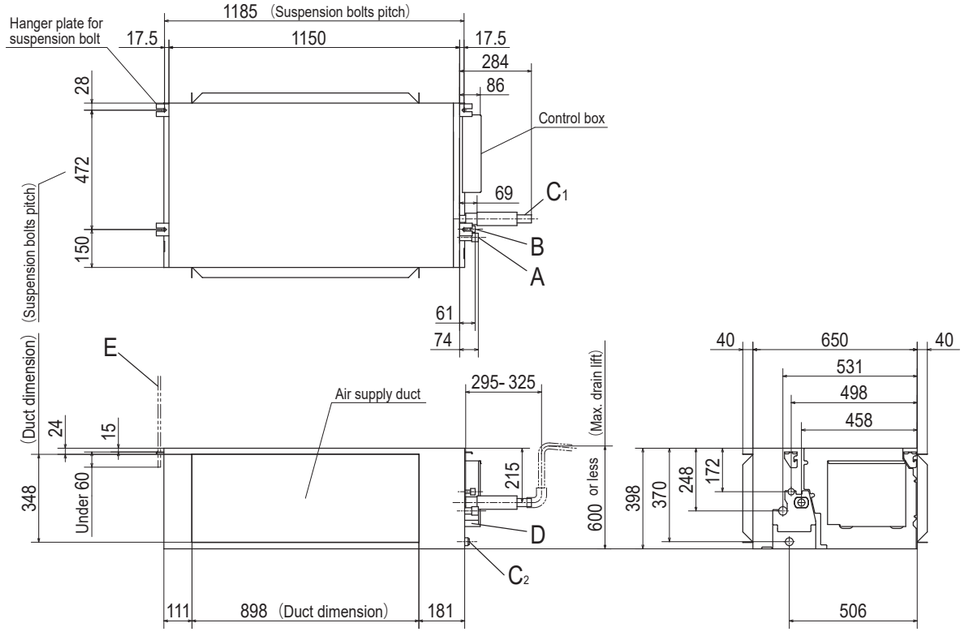

Unit:mm

Space for installation and service

Select either of two cases to keep space for installation and services.

(Case 1) From side of unit

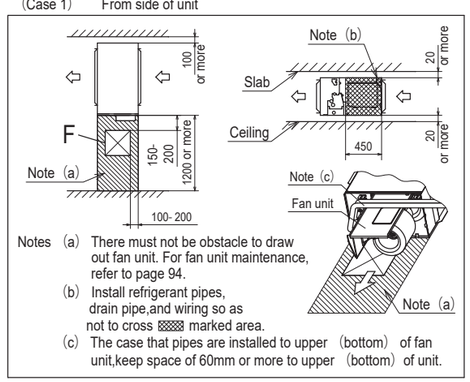

Notes (a) There must not be obstacle to draw out fan unit. For fan unit maintenance, refer to page 94.

(b) Install refrigerant pipes, drain pipe,and wiring so as not to cross ▩ marked area.

(c) The case that pipes are installed to upper (bottom) of fan unit,keep space of 60mm or more to upper (bottom) of unit.

(Case 2) From bottom of unit

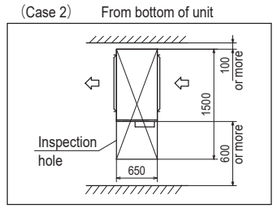

Note (1) The model name label is attached on the lid of the control box.

SRR Series

Models SRR25ZS-W, 35ZS-W

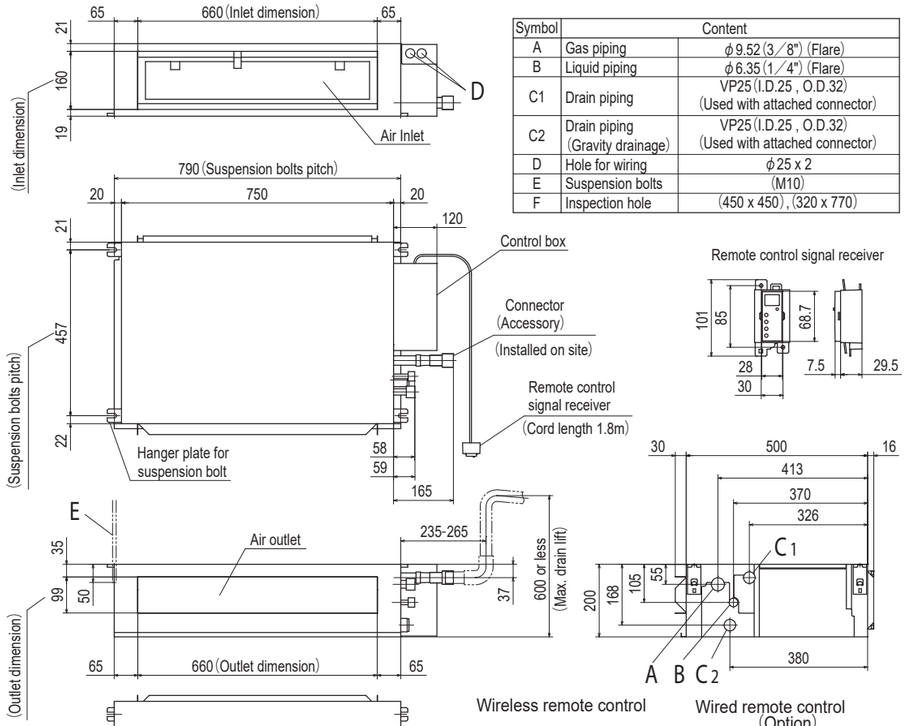

Unit:mm

Notes (1) The model name label is attached on the lid of the control box.

(2) To connect the wired remote control, the interface kit (SC-BIKN2-E) is required.

Space for installation and service

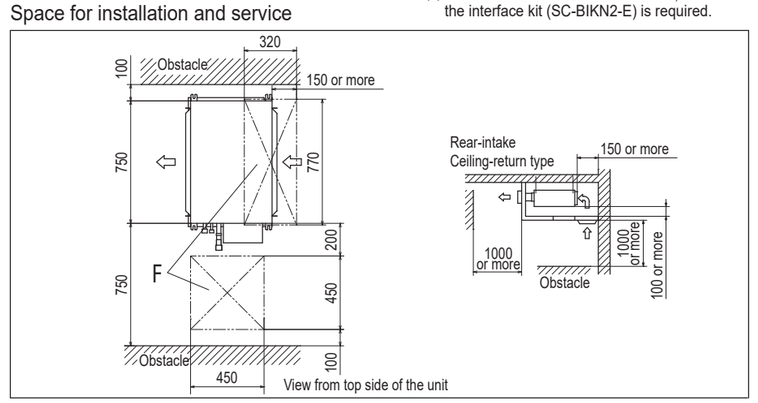

SUPERIOR TECHNOLOGY THAT **OUTLASTS AND OUTPERFORMS**

mhiaa.com.au ABN 92 133 980 275

Australia: Phone: **1300 138 007**

NSW & Head Office	Block E, 391 Park Road, Regents Park NSW 2143
Victoria	2/15 Howleys Road, Notting Hill VIC 3168
Brisbane	5/26 Flinders Parade, North Lakes QLD 4509
Townsville	1/37 Ross River Road, Mysterton QLD 4812
Western Australia	1/15-17 Capital Road, Malaga WA 6090

mhiheatpumps.co.nz G.S.T. 105-673-620

New Zealand: Phone: **0800 138 007**

Auckland	698A Great South Road, Penrose, 1061

Mitsubishi Heavy Industries Air conditioners Australia, Pty. Ltd.

MOVE THE WORLD FORWARD MITSUBISHI HEAVY INDUSTRIES GROUP